UNSW SYDNEY

Estimation of the optimal number of radiotherapy fractions for cancer patients: a review of the evidence

Author:
Wong, Karen

Publication Date:
2012

DOI:
https://doi.org/10.26190/unsworks/15850

License:
https://creativecommons.org/licenses/by-nc-nd/3.0/au/
Link to license to see what you are allowed to do with this resource.

Downloaded from http://hdl.handle.net/1959.4/52288 in https://unsworks.unsw.edu.au on 2024-05-02

Estimation of the optimal number of radiotherapy fractions for cancer patients: a review of the evidence

Karen Hsin Wen Wong

A thesis in fulfilment of the requirements for the degree of
Doctor of Philosophy
Faculty of Medicine
University of New South Wales
2012

PLEASE TYPE

THE UNIVERSITY OF NEW SOUTH WALES
Thesis/Dissertation Sheet

Surname or Family name: Wong

First name: Karen | Other name/s: Hsin Wen

Abbreviation for degree as given in the University calendar: PhD

School: South Western Sydney Clinical School | Faculty: Medicine

Title: Estimation of the optimal number of radiotherapy fractions for cancer patients: a review of the evidence

Abstract 350 words maximum: (PLEASE TYPE)

Background: Adequate radiotherapy services provision entails systematic planning due to their high capital costs and the requirement for specialised staff. A treatment attendance (called a fraction) is a fundamental unit of productivity in a radiotherapy department. There is variation in radiotherapy fractionation practices, however, there is no evidence-based benchmark for appropriate activity. A radiotherapy utilisation model was previously constructed and estimated that 52.3% of cancer patients should receive external beam radiotherapy at least once during their illness. The next challenge is to translate an overall radiotherapy utilisation rate into a more practical estimate of radiotherapy demand.

Aim: To construct an evidence-based model to estimate the optimal number of fractions for the first course of radiotherapy, building on the radiotherapy utilisation model.

Methods: Evidence-based treatment guidelines, meta-analyses and randomised controlled trials were reviewed for fraction number recommendations for each indication of radiotherapy for notifiable cancers with an incidence of ≥ 1%. The previously published radiotherapy utilisation tree was adapted so that the most appropriate evidence-based fraction number was added to each branch. Epidemiological data previously used were updated. For each cancer type, the optimal fraction number was then calculated using the TreeAge software, taking into account the frequency of specific clinical conditions where radiotherapy is indicated and the recommended fraction number for each condition. One-way sensitivity analyses were performed to assess the impact of uncertainties on the model.

Results: For each cancer type, the optimal number of fractions for the first course of radiotherapy ranged from 0 to 26.1 per cancer patient, and 0 to 30.8 per course. Head and neck, brain and anal cancers had the highest number of fractions per course. Overall, the optimal fraction number was 9 per cancer patient and 18 per course. Sensitivity analysis showed that this ranged from 8.6 to 9.6 per cancer patient, and 17.2 to 19.2 per course.

Conclusion: These results represent the first evidence-based benchmark for radiotherapy services delivery, and allow comparisons with actual practices. The model can be used to predict workload to aid in radiotherapy services planning, and adapted to future changes in cancer incidence, stage distribution and fractionation recommendations.

Declaration relating to disposition of project thesis/dissertation

I hereby grant to the University of New South Wales or its agents the right to archive and to make available my thesis or dissertation in whole or in part in the University libraries in all forms of media, now or here after known, subject to the provisions of the Copyright Act 1968. I retain all property rights, such as patent rights. I also retain the right to use in future works (such as articles or books) all or part of this thesis or dissertation.

I also authorise University Microfilms to use the 350 word abstract of my thesis in Dissertation Abstracts International (this is applicable to doctoral theses only).

…… …… ……
Signature Witness Date

The University recognises that there may be exceptional circumstances requiring restrictions on copying or conditions on use. Requests for restriction for a period of up to 2 years must be made in writing. Requests for a longer period of restriction may be considered in exceptional circumstances and require the approval of the Dean of Graduate Research.

FOR OFFICE USE ONLY Date of completion of requirements for Award:

THIS SHEET IS TO BE GLUED TO THE INSIDE FRONT COVER OF THE THESIS

ORIGINALITY STATEMENT

‘I hereby declare that this submission is my own work and to the best of my knowledge it contains no materials previously published or written by another person, or substantial proportions of material which have been accepted for the award of any other degree or diploma at UNSW or any other educational institution, except where due acknowledgement is made in the thesis. Any contribution made to the research by others, with whom I have worked at UNSW or elsewhere, is explicitly acknowledged in the thesis. I also declare that the intellectual content of this thesis is the product of my own work, except to the extent that assistance from others in the project's design and conception or in style, presentation and linguistic expression is acknowledged.’

Signed …….....

Date ……..……..

COPYRIGHT STATEMENT

'I hereby grant the University of New South Wales or its agents the right to archive and to make available my thesis or dissertation in whole or part in the University libraries in all forms of media, now or here after known, subject to the provisions of the Copyright Act 1968. I retain all proprietary rights, such as patent rights. I also retain the right to use in future works (such as articles or books) all or part of this thesis or dissertation.
I also authorise University Microfilms to use the 350 word abstract of my thesis in Dissertation Abstract International (this is applicable to doctoral theses only).
I have either used no substantial portions of copyright material in my thesis or I have obtained permission to use copyright material; where permission has not been granted I have applied/will apply for a partial restriction of the digital copy of my thesis or dissertation.'

Signed …….....

Date ……..…….....

AUTHENTICITY STATEMENT

'I certify that the Library deposit digital copy is a direct equivalent of the final officially approved version of my thesis. No emendation of content has occurred and if there are any minor variations in formatting, they are the result of the conversion to digital format.'

Signed …….....

Date…….....

Abstract

Background: Adequate radiotherapy services provision entails systematic planning due to their high capital costs and the requirement for specialised staff. A treatment attendance (called a fraction) is a fundamental unit of productivity in a radiotherapy department. There is variation in radiotherapy fractionation practices, however, there is no evidence-based benchmark for appropriate activity. A radiotherapy utilisation model was previously constructed and estimated that 52.3% of cancer patients should receive external beam radiotherapy at least once during their illness. The next challenge is to translate an overall radiotherapy utilisation rate into a more practical estimate of radiotherapy demand.

Aim: To construct an evidence-based model to estimate the optimal number of fractions for the first course of radiotherapy, building on the radiotherapy utilisation model.

Methods: Evidence-based treatment guidelines, meta-analyses and randomised controlled trials were reviewed for fraction number recommendations for each indication of radiotherapy for notifiable cancers with an incidence of ≥ 1%. The previously published radiotherapy utilisation tree was adapted so that the most appropriate evidence-based fraction number was added to each branch. Epidemiological data previously used were updated. For each cancer type, the optimal fraction number was then calculated using the TreeAge software, taking into account the frequency of specific clinical conditions where radiotherapy is indicated and the recommended fraction number for each condition. One-way sensitivity analyses were performed to assess the impact of uncertainties on the model.

Results: For each cancer type, the optimal number of fractions for the first course of radiotherapy ranged from 0 to 26.1 per cancer patient, and 0 to 30.8 per course. Head and neck, brain and anal cancers had the highest number of fractions per course. Overall, the optimal fraction number was 9 per cancer patient and 18 per course. Sensitivity analysis showed that this ranged from 8.6

to 9.6 per cancer patient, and 17.2 to 19.2 per course.

Conclusion: These results represent the first evidence-based benchmark for radiotherapy services delivery, and allow comparisons with actual practices. The model can be used to predict workload to aid in radiotherapy services planning, and adapted to future changes in cancer incidence, stage distribution and fractionation recommendations.

Acknowledgements

I would like to express my most sincere thanks to my primary supervisor, Professor Michael Barton, and my co-supervisor, Professor Geoff Delaney, for their guidance and support. Michael − it has been an honour to have you as my mentor. Thank you for your words of wisdom, patience and encouragement, and for teaching me to always strive for the best. Geoff − I have been privileged to be given the opportunity to work under your supervision. Thank you for your never-ending advice, and for teaching me to be confident in what I do.

My sincere appreciation also goes to Dr Dion Forstner for his invaluable support. I am also grateful to all the staff at the Collaboration for Cancer Outcomes Research and Evaluation (CCORE) for their friendship and assistance in this project.

I am indebted to my family who have encouraged me throughout this journey, especially my husband for his unwavering support and understanding, and my son who has been the driving force for me to complete the thesis. Above all, I give my thanks to God who makes all things possible.

Awards

Chris Atkinson Award for the best Radiation Oncology scientific paper presentation at the Royal Australian and New Zealand College of Radiology (RANZCR) Annual Scientific Meeting, Melbourne, Australia, October 2011, for the following oral presentation:

An evidence-based estimation of the optimal number of radiotherapy fractions for cancer patients. K. Wong, M. Barton, G. Delaney. (G. Delaney presented on my behalf as I was unable to attend the meeting.)

Presentations

An evidence-based estimation of the optimal number of radiotherapy fractions for cancer patients. K. Wong, M. Barton, G. Delaney. October 2011. RANZCR Annual Scientific Meeting, Melbourne, Australia.

Estimation of the optimal number of radiotherapy fractions for cancer patients: a review of the evidence. K. Wong. September 2011. University of New South Wales (UNSW) Postgraduate Research Seminar, Liverpool Hospital.

Estimation of the optimal number of radiotherapy fractions for cancer patients: a review of the evidence. K. Wong. August 2010. UNSW Postgraduate Research Seminar, Liverpool Hospital.

Estimation of the optimal number of radiotherapy fractions for cancer patients: a review of the evidence. K. Wong. July 2010. Journal Club, Liverpool and Macarthur Cancer Therapy Centres, Liverpool and Campbelltown Hospitals.

Estimation of the optimal number of radiotherapy fractions for cancer patients: a review of the evidence. K. Wong. October 2009. UNSW Postgraduate Research Seminar, Liverpool Hospital.

Table of Contents

Abbreviations 3
Chapter 1 Introduction 6
Chapter 2 Methods 11
Chapter 3 Genitourinary Cancer 20
3.1 Prostate Cancer 21
3.2 Renal Cancer 46
3.3 Bladder Cancer 57
3.4 Testicular Cancer 72
Chapter 4 Gastrointestinal Cancer 105
4.1 Colon Cancer 106
4.2 Rectal Cancer 115
4.3 Pancreatic Cancer 132
4.4 Gastric Cancer 142
4.5 Oesophageal Cancer 152
4.6 Liver Cancer 171
4.7 Gallbladder Cancer 174
4.8 Small Intestinal Cancer 181
4.9 Anal Cancer 183
Chapter 5 Breast Cancer 192
Chapter 6 Melanoma 219
Chapter 7 Thoracic Cancer 241
7.1 Lung Cancer 242
7.2 Mesothelioma 271
Chapter 8 Lymphoma 274
Chapter 9 Gynaecological Cancer 302
9.1 Cervical Cancer 303
9.2 Endometrial Cancer 322
9.3 Ovarian Cancer 349
9.4 Vulvar Cancer 357
9.5 Vaginal Cancer 367
Chapter 10 Unknown Primary Cancer 379
Chapter 11 Head and Neck Cancer 388

Chapter 12 Leukaemia.....422
Chapter 13 Thyroid Cancer.....436
Chapter 14 Central Nervous System Cancer.....450
Chapter 15 Myeloma.....472
Chapter 16 Sarcoma.....484
16.1 Soft Tissue Sarcoma.....485
16.2 Bone Sarcoma.....493
Chapter 17 Other Cancers.....495
Chapter 18 Palliative Radiotherapy For Brain and Bone Metastases.....497
Chapter 19 Results and Sensitivity Analyses.....501
Chapter 20 Discussion.....509
Chapter 21 Conclusions.....524
Appendix 1 Variables in the Model.....526
Appendix 2 References.....542

Abbreviations

ABVD	Adriamycin, bleomycin, vinblastine, dacarbazine
ACN	Australian Cancer Network
AGITG	Australasian Gastrointestinal Trials Group
AIHW	Australian Institute of Health and Welfare
ALL	Acute lymphoblastic leukaemia
AML	Acute myeloid leukaemia
ASCO	American Society of Clinical Oncology
ASTRO	American Society for Radiation Oncology
BC	British Columbia
BCSH	British Committee for Standards in Haematology
BEACOPP	Bleomycin, etoposide, doxorubicin, cyclophosphamide, vincristine, procarbazine, prednisone
CBTRUS	Central Brain Tumor Registry of the United States
CHART	Continuous hyperfractionated accelerated radiotherapy
CHOP	Cyclophosphamide, adriamycin, vincristine, prednisone
CNS	Central nervous system
DCIS	Ductal carcinoma in situ
EAU	European Association of Urology
ECOG	Eastern Cooperative Oncology Group
EGCCCG	European Germ Cell Cancer Consensus Group
EORTC	European Organisation for Research and Treatment of Cancer
ESMO	European Society of Medical Oncology
FIGO	International Federation of Gynecology and Obstetrics
FROGG	Faculty of Radiation Oncology Genito-Urinary Group
GHSG	German Hodgkin's Lymphoma Study Group
GMCT	Greater Metropolitan Clinical Taskforce
GOG	Gynecologic Oncology Group
GS	Gleason score
GTCSG	German Testicular Cancer Study Group
IGCCCG	International Germ Cell Cancer Collaborative Group

INT	Intergroup trial
LDH	Lactate dehydrogenase
MAGIC	Medical Research Council Adjuvant Gastric Infusional Chemotherapy
MALT	Mucosa-associated lymphoid tissue
MDACC	MD Anderson Cancer Centre
MRC	Medical Research Council
NBCC	National Breast Cancer Centre
NCCN	National Comprehensive Cancer Network
NCI	National Cancer Institute
NHL	Non-Hodgkin's lymphoma
NHMRC	National Health and Medical Research Council
NICE	National Institute for Health and Clinical Excellence
NOS	Not otherwise specified
NSABP	National Surgical Adjuvant Breast and Bowel Project
NSCLC	Non-small cell lung cancer
NSGCT	Non-seminomatous germ cell tumour
NSW	New South Wales
PCI	Prophylactic cranial irradiation
PCOS	Prostate Cancer Care and Outcomes Study
PORTEC	Postoperative Radiation Therapy for Endometrial Carcinoma
PSA	Prostate-specific antigen
PUVA	Psoralen and ultraviolet A
RCR	Royal College of Radiologists
ROJIG	Radiation Oncology Jurisdictional Implementation Group
RPLND	Retroperitoneal lymph node dissection
RTOG	Radiation Therapy Oncology Group
SA	South Australia
SCLC	Small cell lung cancer
SEER	Surveillance, Epidemiology and End Results
SIGN	Scottish Intercollegiate Guidelines Network
START	Standardisation of Breast Radiotherapy
SWOG	Southwest Oncology Group

TBI	Total body irradiation
TDF	Time dose fractionation
TROG	Trans Tasman Radiation Oncology Group
TSEBT	Total skin electron beam therapy
UKMF	United Kingdom Myeloma Forum
WHO	World Health Organisation

Chapter 1 Introduction

Background

Radiotherapy plays an important role in the management of cancer patients. Radiotherapy delivery is a complex, multi-step process which involves many different staff and infrastructure needs. Due to the highly specialised staff required to prescribe, plan and deliver radiotherapy, and the high capital costs of radiotherapy facilities, systematic long-term planning is needed to ensure provision of adequate radiotherapy services for a population.

Radiotherapy utilisation rates vary substantially throughout Australia and internationally. Delaney et al (1-2) constructed an optimal radiotherapy utilisation model based upon indications for radiotherapy taken from evidence-based treatment guidelines. It was estimated that 52.3% of all cancer patients should optimally be treated with external beam radiotherapy at least once during the course of their illness. This optimal radiotherapy utilisation rate has since become the benchmark in Australia against which actual radiotherapy utilisation rates are compared. It provides valuable data for the planning of radiotherapy services in Australia in order to optimise patients' access to radiotherapy facilities (3-5). The optimal radiotherapy utilisation model has also been adopted and adapted internationally to aid in the planning of radiotherapy services (6-8).

The optimal radiotherapy utilisation model predicts whether patients should receive external beam radiotherapy. The next step is to translate radiotherapy utilisation rate into a more useable and practical estimate of radiotherapy demand. External beam radiotherapy delivers high energy x-rays to the tumour from outside the body. A course of external beam radiotherapy is delivered in small doses called fractions, usually given once a day, five days a week, and lasts for days to weeks. Dividing the total dose into multiple small doses delivered daily allows the normal tissue surrounding the tumour to repair, thereby delivering a high dose to the tumour while minimising damage to the normal tissue and therefore side-effects of treatment. Radical radiotherapy, aiming to eradicate the tumour, requires a high total dose and is typically delivered over 2 to 8 weeks. On the other hand, palliative radiotherapy, which

aims to improve symptoms, usually requires a lower total dose. A course of palliative radiotherapy is delivered in fewer fractions and may last from one day to a few weeks.

A fraction therefore is the fundamental unit of productivity in a radiotherapy department. The average number of fractions per radiotherapy course in a department will depend on the proportion of patients receiving radical versus palliative treatment. Number of fractions has been used by some groups for radiotherapy services planning and this parameter has been recognised as valuable. Morgan et al (4) estimated the number of linear accelerators required in Australia and New Zealand in 2009 and found that an extra 50 linear accelerators were required to achieve a 52.3% radiotherapy utilisation rate, using the Radiation Oncology Jurisdictional Implementation Group (ROJIG) planning parameters for linear accelerator capacity (9). The calculations were based on 19 fractions per treatment course which reflected actual practice and was not evidence-based. The Radiotherapy Activity Planning Group of the Scottish Executive Health Department adapted the optimal radiotherapy utilisation model to predict radiotherapy workload in Scotland for 2011 to 2015 (7-8). Dose fractionation schedules were combined with the estimated number of patients with an indication of radiotherapy for each cancer type to calculate the total number of fractions required per annum. Dose fractionation schedules applied in the Scottish model were determined from a survey of Clinical Oncologists. They were asked to provide the dose fractionation schedules they were using in their practice at the time of the survey in a number of clinical scenarios, and also to provide best guesstimates of what dose fractionation schedules might be used in 2011 to 2015 from their knowledge of ongoing clinical trials. Again, the number of fractions used in the calculations was based on actual practice and not entirely evidence-based.

The Malthus programme was launched in late 2011 as a tool to estimate radiotherapy demand in England (10). This web-based model comprised of radiotherapy utilisation decision trees for 23 cancer sites and used epidemiological data of England in combination with dose fractionation schedules to estimate the fraction burden per million of a population. Both

evidence-based as well as non-evidence-based dose fractionation schedules were taken into consideration in estimating radiotherapy demand. Fractionation schedules with a defined evidence base were identified in the decision trees. Non-evidence-based fractionation schedules were established by consensus amongst Clinical Oncologists in England as an attempt to ensure that common treatment protocols were captured in the model. The decision trees therefore represented a summary of evidence-based and consensus practice across England.

Similar to radiotherapy utilisation rates, substantial variation in radiotherapy fractionation practices has also been observed in Australia and overseas. In 2010, the average number of radiotherapy fractions per treatment course ranged from 15.3 to 23.7 in the 17 Radiation Oncology centres in New South Wales (NSW) (11). The overall average number of fractions per treatment course in NSW was 18.6. In comparison, the average number of fractions per treatment course was 13.7 in Scotland in 2003 (8). Considerable variation was also observed amongst the 5 Radiation Oncology centres in Scotland, with the average number of fractions per treatment course ranging from 11.7 to 17.3. In the UK, the average number of fractions per treatment course was 13.1 in 2005 (12) and 13.4 in 2007 (13). In view of the variation in actual fractionation practices, it is important to construct a model to estimate the optimum number of fractions per cancer patient and per treatment course based on best available evidence.

The aim of this study was to construct an evidence-based model to estimate the optimal number of radiotherapy fractions for the first course of radiotherapy per cancer patient and per treatment course, building on the optimal radiotherapy utilisation model.

Project Objectives

The objectives of the project were

- To develop a model of radiotherapy fractionation building on the optimal radiotherapy utilisation model. This model can be adapted for future changes in cancer incidence rates, stage at presentation, indications for radiotherapy and fractionation schedules.
- To estimate the optimal number of radiotherapy fractions for the first course of radiotherapy per cancer patient and per treatment course from the best available evidence, which will be useful in aiding future radiotherapy services planning.
- To estimate the proportion of patients that should receive radical versus palliative radiotherapy as their first course of radiotherapy, and the optimal number of radiotherapy fractions per radical radiotherapy course and per palliative radiotherapy course based on best available evidence.

Chapter 2 Methods

The objective of the project was to construct a model to estimate the optimal number of radiotherapy fractions for the first course of radiotherapy per cancer patient and per treatment course, based on the best available evidence. This estimate will provide a benchmark for assessing current radiotherapy services delivery, and will be helpful in predicting future radiotherapy workload and hence aid in the planning of future radiotherapy services.

The previously published optimal radiotherapy utilisation model (1-2) was used as the basis of this project. In that study, an optimal radiotherapy utilisation tree was constructed for each cancer type or site based upon indications for radiotherapy taken from evidence-based treatment guidelines. An “indication for radiotherapy” was defined as a clinical situation in which radiotherapy was recommended as *treatment of choice* on the basis of published evidence that radiotherapy has a superior clinical outcome compared to alternative treatment modalities, and where the patient was suitable to undergo radiotherapy based on an assessment of performance status and the presence or absence of co-morbidities. The proportion of patients with clinical attributes that indicated a possible benefit from radiotherapy was obtained by incorporating epidemiological data into the radiotherapy utilisation tree. As the purpose of that study was to determine the proportion of all cancer patients who have at least one indication for radiotherapy at some time in the course of their illness, patients requiring radiotherapy were counted only once, even if they had multiple indications at different stages in their illness. The proportion of patients with cancer in whom external beam radiotherapy was indicated as treatment of choice according to the best available evidence was calculated to be 52.3%.

This current project was limited to the first course of radiotherapy in patients with a notifiable cancer with an incidence of ≥1% of the Australian cancer population, as was the optimal radiotherapy utilisation study (1-2). Notifiable cancers are cancers for which registry data are available, and in Australia do not include non-melanomatous skin cancers and benign tumours. The remaining cancers with an incidence of < 1% were grouped together and classified as “other cancers”. These included uncommon cancers such as cancer of the peritoneum and retroperitoneum and cancer of the eye.

Building on the optimal radiotherapy utilisation model, the following steps were employed to develop a model of optimal radiotherapy fractionation for each cancer site.

Step 1: Defining evidence for the most appropriate dose fractionation schedules of radiotherapy

The optimal dose fractionation schedule of radiotherapy for each clinical situation of each cancer site where radiotherapy was indicated (i.e., each terminal branch of the optimal radiotherapy utilisation tree) was derived from evidence-based treatment guidelines issued by major national and international organisations. Evidence-based treatment guidelines have undergone rigorous peer review prior to publication and are therefore likely to be more accurate compared with individual reviews of published clinical trials. Guidelines that were published prior to 2000 were excluded because the data used in the development of these guidelines could be out-dated. The cut-off date for inclusion of guidelines in this study was December 2010.

If guidelines did not exist for particular cancer sites, or where the guidelines did not adequately address radiotherapy dose fractionation schedules, other sources including meta-analyses, randomised controlled trials and case series were identified. The quality of evidence was assessed according to the National Health and Medical Research Council (NHMRC) hierarchy of levels of evidence (14) (Table 1).

Table 1. NHMRC evidence hierarchy (14)

Level	Description
I	Systematic review of all relevant randomised controlled trials
II	At least one properly conducted randomised controlled trial
III	Pseudo-randomised controlled trials and comparative studies with either concurrent or historical controls

IV	Case series

Step 2: Indications for radiotherapy

In the optimal radiotherapy utilisation model (1-2), patient and tumour-related attributes were used to define specific radiotherapy indications. For each type of cancer, a radiotherapy utilisation tree was developed in which each branch point represented a particular indication for radiotherapy. In some instances these trees did not differentiate whether the radiotherapy was recommended for curative or palliative intent (e.g., non-metastatic bladder cancer will have a mixture of radical and palliative recommendations), as the original study was purely deciding whether radiotherapy was recommended at all or not and the trees were not designed to show proportions by treatment intent. Curative and palliative regimens usually have a different number of fractions.

In this project, some of the branches of the original optimal radiotherapy utilisation model were split to model more specific clinical situations where the fractionation schemes vary between branches. For example, in the optimal radiotherapy utilisation tree for rectal cancer, all patients with local recurrence after initial radical surgery for a T1N0M0 rectal cancer were depicted having radiotherapy. A proportion of these patients would have local recurrence confined to the pelvis which is resectable, a proportion would have local recurrence confined to the pelvis which is unresectable, and the remainder of the patients would have synchronous local and distant recurrences. Depending on the clinical situation, a different radiotherapy fractionation schedule would be indicated. Therefore, the branch representing patients with a T1N0M0 rectal cancer with local recurrence after radical surgery was split into two branches, one representing patients with local recurrence confined to the pelvis, and the other representing patients with synchronous local and distant recurrences. The branch representing patients with local recurrence confined to the pelvis was further split into two branches, one representing patients with local recurrence which was resectable, and the other representing patients with local recurrence which was unresectable.

Step 3: Epidemiology of cancer types, tumour sites and stages

Information on the proportions of patients with the different attributes associated with each additional branch of the tree was obtained by performing Medline searches, manual bibliographic searches and examination of review articles. Australian data were used if available as the primary purpose was to apply this model to the Australian cancer population. The relative quality of epidemiological data was ranked according to a hierarchy system that gave greatest importance to Australian population-based data. This system was used in the development of the optimal radiotherapy utilisation model (1-2) and is shown in Table 2.

Table 2. Hierarchy of epidemiological data

Quality of Source	Source Type
α	Australian National Epidemiological data
β	Australian State Cancer Registry
γ	Epidemiological databases from other large international groups (e.g., Surveillance, Epidemiology and End Results (SEER) database)
δ	Results from reports of a random sample from a population
ε	Comprehensive multi-institutional database
ζ	Comprehensive single-institutional database
θ	Multi-institutional reports on selected groups (e.g., multi-institutional clinical trials)
λ	Single-institutional reports on selected groups of cases
μ	Expert opinion

In the optimal radiotherapy utilisation model (1-2), national cancer incidence figures from 1998 published by the Australian Institute of Health and Welfare (AIHW) (15) were used to determine the incidence of cancer types. In this

current project, the most recent national cancer incidence figures from 2005 published by the AIHW (16) were used.

Step 4: Estimation of the optimal number of radiotherapy fractions

From the evidence on the number of radiotherapy fractions and the epidemiological data on the clinical attributes when radiotherapy was indicated, the optimal number of radiotherapy fractions per patient for each cancer site was calculated.

TreeAge software version 3.5™ (TreeAge Software, Williamstown, MA) was used to construct the radiotherapy fractionation model, as was used in the optimal radiotherapy utilisation model (1-2). Each terminal branch of the tree ended in a “pay-off” with the number of radiotherapy fractions as the final outcome. The recommended number of fractions, based on best available evidence, was added at each terminal branch. For the purposes of this study, in instances where a range of number of fractions was recommended for a terminal branch, a single value was used in the calculations. This value would be the number of fractions best supported by evidence. If there were a number of sources of equal quality that recommended different fractionation regimens, the number of fractions recommended in the Australian guidelines was used, as the primary purpose of the study was to make recommendations for radiotherapy services in Australia. When Australian guidelines did not exist for particular cancer sites or where fractionation recommendations were not in the guidelines, the lowest of the range of number of fractions recommended in the other national or large collaborative group guidelines was used in the calculations. For all the branches where a range of number of fractions was recommended, a sensitivity analysis was conducted to assess the effect of the range of number of fractions on the optimal number of fractions per patient of that cancer site (see step 5 below).

By dividing this number by the proportion of patients with that particular cancer recommended to have radiotherapy, the optimal number of radiotherapy

fractions per treatment course for that cancer was calculated. The overall optimal number of radiotherapy fractions was determined by calculating the average of the optimal number of radiotherapy fractions for all cancer sites, taking into account the different proportions of these cancers.

Step 5: Sensitivity analysis

Some variables in the model were associated with significant uncertainties. These included:

i. Uncertainty in the proportions of patients with particular clinical attributes as a result of differences in epidemiological data from multiple sources
ii. Uncertainty in the indication for radiotherapy as a result of conflicts in radiotherapy recommendations between treatment guidelines
iii. Uncertainty in the choice between radiotherapy and alternative treatments of equal efficacy
iv. Uncertainty in the number of radiotherapy fractions due to different recommendations in the treatment guidelines

Sensitivity analysis was performed to assess the effect of uncertainties on the overall optimal number of radiotherapy fractions. The TreeAge software allowed different estimates to be modelled using one-way sensitivity analysis and Monte Carlo simulation techniques. One-way sensitivity analysis allowed a single uncertain variable to be modelled and was performed for each individual cancer site to assess the impact of these uncertainties on the optimal number of radiotherapy fractions for that cancer site. This was done by setting upper and lower data limits and modelling the radiotherapy fractionation tree using these extreme values. One-way sensitivity analyses were presented in the form of a tornado diagram. Each bar represented the range of results when a single variable was changed and the legend provided details of each of the analyses depicted. The variables were ranked on their effect on the radiotherapy fractionation estimate with the variables that have most impact appearing at the top of the graph and those with smaller impact appearing below. Monte Carlo simulations allowed for assessments of multiple uncertain data for their effect

on the overall optimal number of radiotherapy fractions. Monte Carlo simulations are based upon the random sampling of variables from discrete and continuous distributions during individual trials.

A description of the layout of the rest of the thesis

Each chapter discusses a particular cancer site and contains:

i. A table consisting of indications for radiotherapy, recommendations on the number of radiotherapy fractions, the sources from where these recommendations came, and the level of evidence. The outcomes are numbered consecutively based on their order of appearance in the radiotherapy fractionation tree.
ii. A table listing the epidemiological data on the cancer incidence and on the specific attributes that contribute to the additional branches of the tree, the sources of data, and their level of importance.
iii. Explanatory notes detailing the sources of the epidemiological data, the guideline recommendations for radiotherapy and the number of radiotherapy fractions.
iv. A sensitivity analysis with a tornado diagram representing the one-way sensitivity analysis. Each variable is represented by a horizontal bar with the variable that has the most impact appearing on the top.
v. A radiotherapy fractionation tree, with each attribute where a radiotherapy decision is made being represented by a branch. As an example, the rectal cancer fractionation tree is shown in the diagram below (Fig. 1). Below each branch is the proportion of patients that are represented by that branch (Fig. 1, a). Each terminal branch of the tree ends in an outcome with a number which represents the recommended number of radiotherapy fractions for the patients represented by that branch (Fig. 1, b). The right hand column shows the proportion of patients who have attributes consistent with each terminal branch of the tree (Fig. 1,c). This is calculated by multiplying all of the proportions of all the branches that end with that terminal branch. The optimal number of fractions per patient of the cancer site is shown on the left of the tree (Fig. 1, d).

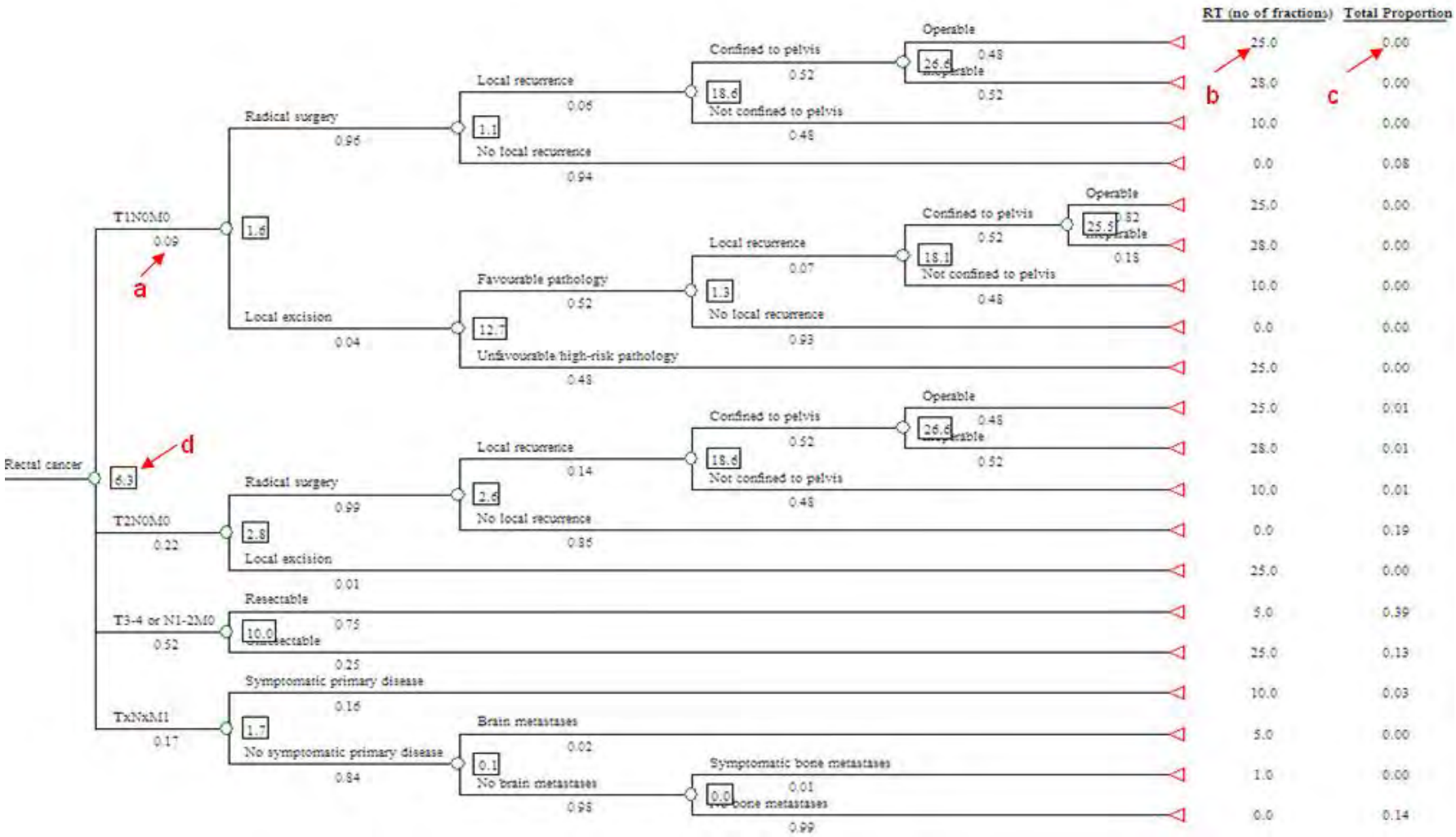

Figure 1. Rectal cancer fractionation tree

Chapter 3 Genitourinary Cancer

3.1 Prostate Cancer

Table 1. Prostate Cancer. Number of fractions of radiotherapy – Sources of evidence

Outcome no (utilisation model)	Clinical scenario (utilisation model)	Outcome no (fractionation model)	Clinical scenario (addition to fractionation model)	No of fractions	Range of no of fractions	Level of evidence	References	Notes	Proportion of all prostate cancer patients
1	Stage T1N0M0, good PS, surgery, positive margins	1	–	30	30–32	II	FROGG guidelines (17)	2	0.02
2	Stage T1N0M0, good PS, surgery, negative margins, local recurrence/ PSA rise with no bone metastases	2	PSA rise only	33	30–33	III	FROGG guidelines (17)	3	0.01
		3	Macroscopic disease	33	–	III	FROGG guidelines (17)	3	<0.01
4	Stage T1N0M0, good PS, surgery, negative margins, no local recurrence, distant relapse with symptomatic	5	–	1	1–5	I	RCR guidelines (18)	8	0.01

Outcome no (utilisation model)	Clinical scenario (utilisation model)	Outcome no (fractionation model)	Clinical scenario (addition to fractionation model)	No of fractions	Range of no of fractions	Level of evidence	References	Notes	Proportion of all prostate cancer patients
	progressive disease								
6	Stage T1N0M0, good PS, radiotherapy	7	Low risk	35	16–44	I	FROGG guidelines (19) NCCN guidelines (20) Cancer Care Ontario guidelines (21) Cancer Care Nova Scotia guidelines (22) RCR guidelines (18)	4	0.02
		8	Intermediate/ high risk	37	16–44	I	FROGG guidelines (19) ACN guidelines (23) NCCN guidelines (20) Cancer Care Ontario guidelines (21) Cancer Care Nova Scotia guidelines (22) RCR guidelines (18)	4	0.02
7	Stage T1N0M0,	9	Progressive local	35	16–44	I	FROGG guidelines (19)	6	<0.01

Outcome no (utilisation model)	Clinical scenario (utilisation model)	Outcome no (fractionation model)	Clinical scenario (addition to fractionation model)	No of fractions	Range of no of fractions	Level of evidence	References	Notes	Proportion of all prostate cancer patients
	good PS, observation, progressive local or distant symptoms warranting radiotherapy		disease						
		10	Progressive distant disease	1	1–5	I	RCR guidelines (18)	6	<0.01
9	Stage T1N0M0, poor PS, progressive local or distant symptoms	12	–	1	1–10	I, –	RCR guidelines (18)	7	<0.01
11	Stage T2N0M0, good PS, surgery, positive margins	14	–	30	30–32	II	FROGG guidelines (17)	2	0.07
12	Stage T2N0M0, good PS, preference - surgery, negative margins, local recurrence/ PSA rise	15	PSA rise only	33	30–33	III	FROGG guidelines (17)	3	0.02
		16	Macroscopic disease	33	–	III	FROGG guidelines (17)	3	<0.01

Outcome no (utilisation model)	Clinical scenario (utilisation model)	Outcome no (fractionation model)	Clinical scenario (addition to fractionation model)	No of fractions	Range of no of fractions	Level of evidence	References	Notes	Proportion of all prostate cancer patients
	with no bone metastases								
14	Stage T2N0M0, good PS, surgery, negative margins, no local recurrence, distant relapse with symptomatic progressive disease	18	–	1	1–5	I	RCR guidelines (18)	8	0.01
16	Stage T2N0M0, good PS, preference -radiotherapy	20	Low risk	35	16–44	I	FROGG guidelines (19) NCCN guidelines (20) Cancer Care Ontario guidelines (21) Cancer Care Nova Scotia guidelines (22) RCR guidelines (18)	4	0.02
		21	Intermediate/ high	37	16–44	I	FROGG guidelines (19)	4	0.09

Outcome no (utilisation model)	Clinical scenario (utilisation model)	Outcome no (fractionation model)	Clinical scenario (addition to fractionation model)	No of fractions	Range of no of fractions	Level of evidence	References	Notes	Proportion of all prostate cancer patients
			risk				ACN guidelines (23) NCCN guidelines (20) Cancer Care Ontario guidelines (21) Cancer Care Nova Scotia guidelines (22) RCR guidelines (18)		
17	Stage T2N0M0, good PS, observation, progressive local or distant symptoms warranting radiotherapy	22	Progressive local disease	35	16–44	I	FROGG guidelines (19)	6	<0.01
		23	Progressive distant disease	1	1–5	I	RCR guidelines (18)	6	<0.01
19	Stage T2N0M0, poor PS, progressive local or distant symptoms	25	–	1	1–10	I, –	RCR guidelines (18)	7	0.01

Outcome no (utilisation model)	Clinical scenario (utilisation model)	Outcome no (fractionation model)	Clinical scenario (addition to fractionation model)	No of fractions	Range of no of fractions	Level of evidence	References	Notes	Proportion of all prostate cancer patients
21	Stage T3-4N0M0, good PS	27	–	37	16–44	I	FROGG guidelines (19)	4	0.10
22	Stage T3-4N0M0, poor PS, progressive local or distant symptoms	28	–	1	1–10	I, –	RCR guidelines (18)	7	<0.01
24	Stage T1-4N1M0 or T1-4N0-1M1, bone pain	30	–	1	1–5	I	RCR guidelines (18)	8	0.20

Proportion of all prostate cancer patients in whom radiotherapy is recommended	**0.60 (60%)**
Proportion of all cancer patients = 0.60 x 0.16 =	**0.096 (9.6%)**
Average number of fractions per prostate cancer patient	**13.3**
Average number of fractions per treatment course = 13.3/0.60 =	**22.2**

Key to abbreviations in prostate cancer decision tree and tables

PS – Performance status

FROGG – Faculty of Radiation Oncology Genito-Urinary Group

PSA – Prostate-specific antigen

RCR – Royal College of Radiologists

NCCN – National Comprehensive Cancer Network

ACN – Australian Cancer Network

NSW PCOS – New South Wales Prostate Cancer Care and Outcomes Study

Table 2. Prostate Cancer. The incidence of attributes used to define number of radiotherapy fractions

Key	Population or subpopulation of interest	Attribute	Proportion of populations with this attribute	Quality of information	References	Notes
A	All registry cancers	Prostate cancer	0.16	α	AIHW (16)	1
B	Stage T1N0M0, good PS, surgery, negative margins, local recurrence/ PSA rise with no metastases	PSA rise only	0.78	ε	Quinn et al (24)	3
C	Stage T1N0M0, good PS, radiotherapy	Low risk	0.47	β	NSW PCOS (D. Smith, personal communication)	5
D	Stage T1N0M0, good PS, observation, progressive local or distant disease warranting radiotherapy	Progressive local disease	1 0.72	ζ δ	Zietman et al (25) Shappley et al (26)	6
E	Stage T2N0M0, good PS, surgery, negative margins, local recurrence/ PSA rise with no metastases	PSA rise only	0.78	ε	Quinn et al (24)	3

Key	Population or subpopulation of interest	Attribute	Proportion of populations with this attribute	Quality of information	References	Notes
F	Stage T2N0M0, good PS, radiotherapy	Low risk	0.15	β	NSW PCOS (D. Smith, personal communication)	5
G	Stage T2N0M0, good PS, observation, progressive local or distant disease warranting radiotherapy	Progressive local disease	1 0.72	ζ ε	Zietman et al (25) Shappley et al (26)	6

Prostate Cancer

The optimal radiotherapy fractionation model for prostate cancer was based on the optimal radiotherapy utilisation model for genitourinary cancer (1, 27). The aim of this current study was to estimate the optimal number of radiotherapy fractions for external beam radiotherapy. Brachytherapy was outside of the scope of this study, however, it is acknowledged that brachytherapy is an alternative to external beam radiotherapy, radical prostatectomy and observation in selected patients with low risk disease. For patients with intermediate or high risk disease who undergo external beam radiotherapy, a brachytherapy boost may also be a treatment option for selected patients.

Treatment Guidelines

The following clinical practice guidelines for the management of prostate cancer were identified:

- Australian Cancer Network (ACN) clinical practice guidelines for the management of locally advanced and metastatic prostate cancer (2010) (23)
- NHMRC clinical practice guidelines: evidence-based information and recommendations for the management of localised prostate cancer (2002) (28)
- Australian and New Zealand Faculty of Radiation Oncology Genito-Urinary Group (FROGG) consensus guidelines for definitive external beam radiotherapy for prostate carcinoma (2010) (19)
- Australian and New Zealand FROGG consensus guidelines for three-dimensional conformal radiation therapy for prostate cancer (2004) (29)
- Australian and New Zealand FROGG consensus guidelines for post-prostatectomy radiation therapy (2008) (17)
- National Comprehensive Cancer Network (NCCN) clinical practice guidelines on prostate cancer (version 1.2011) (20)
- National Cancer Institute (NCI) PDQ guidelines on prostate cancer (2010) (30)

- British Columbia (BC) Cancer Agency genitourinary cancer management guidelines (prostate) (2009) (31)
- Cancer Care Ontario guidelines on the use of conformal radiotherapy and the selection of radiation dose in T1 or T2 prostate cancer (2002) (21)
- Cancer Care Ontario guidelines on adjuvant radiotherapy following radical prostatectomy for pathologic T3 or margin-positive prostate cancer (2010) (32)
- Cancer Care Nova Scotia guidelines for the management of prostate cancer (2006) (22)
- The Royal College of Radiologists (RCR) radiotherapy dose-fractionation guidelines (2006) (18)

Explanatory Notes for Tables 1 and 2

1. Incidence of prostate cancer

Prostate cancer constituted 16.3% of all cancers occurring in Australia in 2005 (16).

2. Stage T1-2N0M0 prostate cancer: adjuvant radiotherapy for positive margins

The Australian and New Zealand FROGG consensus guidelines for post-prostatectomy radiation therapy (17) recommend a dose of 60 to 64 Gy in the adjuvant setting, as this dose range was used in randomised controlled trials which showed that adjuvant radiotherapy improved biochemical progression-free survival compared with observation post-prostatectomy (33-35). Given in 2 Gy per fraction, this dose is delivered in 30 to 32 fractions. The shortest dose fractionation schedule, 60 Gy in 30 fractions, was used in the model. A sensitivity analysis was performed to assess the impact of the range of number of fractions (30 to 32 fractions) on the average number of fractions per prostate cancer patient.

3. Stage T1-2N0M0 prostate cancer: salvage radiotherapy for local recurrence/prostate-specific antigen (PSA) rise with no metastases

The FROGG consensus guidelines for post-prostatectomy radiation therapy (17) state that, in the salvage setting, the study reported by Anscher et al (36) showed that doses above 65 Gy predicted for better disease-free survival on multivariate analysis, and that similar doses have been advocated based on retrospective data by Valicenti et al (37) and MacDonald et al (38). The guidelines state that a dose range of 60 to 66 Gy is reasonable given that salvage may potentially be instituted at an early PSA rise when the tumour burden may be expected to be low. Given in 2 Gy per fraction, this dose is delivered in 30 to 33 fractions. The guidelines recommend that macroscopic prostate bed recurrences will require doses in the order of 66 Gy to obtain local control. Given in 2 Gy per fraction, this dose is delivered in 33 fractions. The guidelines state that higher doses may be considered if radiotherapy techniques are available to minimise morbidity, however no specific dose range is recommended.

Quinn et al (24) estimated the proportion of patients who develop local recurrence or PSA relapse following radical surgery. In this Australian study of 732 men treated with radical prostatectomy, 129 (18%) developed a PSA or clinically detected local recurrence. Of these, 101 patients (78%) had a PSA only relapse and 28 patients (22%) had a clinical local recurrence detected on digital rectal examination. In this model, these data were used to divide patients with local recurrence/PSA rise with no metastases into two branches: those with PSA rise only (0.78) and those with macroscopic disease (0.22).

For patients with PSA rise only, the dose fractionation schedule, 66 Gy in 33 fractions, was used in the model, based on studies which showed better disease-free survival with doses above 65 Gy. A sensitivity analysis was performed to assess the impact of the range of number of fractions (30 to 33 fractions), as recommended by the guidelines, on the average number of fractions per prostate cancer patient. For patients with macroscopic disease, the dose fractionation schedule, 66 Gy in 33 fractions, was used in the model.

4. Stage T1-4N0M0 prostate cancer: definitive radiotherapy dose

The Australian and New Zealand FROGG guidelines on definitive external beam radiotherapy (19) recommend the following risk stratification groupings for the purposes of patient and treatment selection:

i. Low risk— PSA < 10 ng/mL and Gleason score (GS) 6 and T1-T2a
ii. Intermediate risk— PSA 10-20 ng/ml or GS 7 or T2b-c
iii. High risk— PSA > 20 ng/mL or GS 8-10 or T3

A range of dose fractionation schedules is recommended in the guidelines, as shown in table 3.

Table 3. Definitive radiotherapy for prostate cancer: radiotherapy dose recommended in the guidelines

Guidelines	Radiotherapy dose
FROGG guidelines (19)	≥ 70 Gy (low risk) ≥ 74 Gy (intermediate and high risk)
ACN guidelines (23)	≥ 74 Gy (high risk)
NCCN guidelines (20)	75.6-79 Gy in 36-41 fractions (low risk) 75-80 Gy (intermediate and high risk)
Cancer Care Ontario guidelines (21)	75-78 Gy in 1.8-2 Gy per fraction (low and intermediate risk)
Cancer Care Nova Scotia guidelines (22)	70-74 Gy in 35-37 fractions (low risk) 70-76 Gy in 35-38 fractions (intermediate risk) 70-71 Gy in 35 fractions (high risk)

RCR guidelines (18)	74-78 Gy in 37-39 fractions 50 Gy in 16 fractions ≥55 Gy in 20 fractions

The FROGG guidelines (19) recommend minimum acceptable doses of 70 Gy for low risk patients and 74 Gy for intermediate and high risk patients. The guidelines also state that dose escalation to 78 to 80 Gy results in improved biochemical failure free survival when compared with conventional radiotherapy doses (68 to 70.2 Gy), and that the benefit of dose escalation to 78 to 80 Gy is seen across all risk groups, making reference to randomised controlled studies and a meta-analysis which have demonstrated improved biochemical failure free survival with higher radiotherapy doses (39-44). The dose range of 78 to 80 Gy was delivered in 39 to 44 fractions in the randomised controlled studies (39-40, 42-43).

The ACN clinical practice guidelines for the management of locally advanced and metastatic prostate cancer (23) also state that studies of dose escalation have shown improved efficacy in terms of freedom from biochemical or clinical failure for patients with high risk prostate cancer, and recommend that consideration should be given to dose escalation (74Gy or higher) if it can be delivered safely.

The NCCN guidelines (20) state that a dose of 75.6 to 79 Gy in 36 to 41 fractions is appropriate for patients with low risk disease, and patients with intermediate and high risk disease should receive doses between 75 and 80 Gy. The Cancer Care Ontario guidelines on the use of conformal radiotherapy and the selection of radiation dose in T1 or T2 low or intermediate risk prostate cancer (21) recommend a dose of 75 to 78 Gy in 1.8 to 2 Gy per fraction. The Cancer Care Nova Scotia guidelines (22) recommend a dose of 70 to 74 Gy in 35 to 37 fractions for low risk disease, 70 to 76 Gy in 35 to 38 fractions for intermediate risk disease, and 70 to 71 Gy in 35 fractions for high risk disease.

The RCR dose-fractionation guidelines (18) state that given inter-departmental variation in definition of planning target volume, radiotherapy technique,

prescribing conventions and use of hormone therapy, it is not appropriate to make any universal recommendation concerning dose. The guidelines state that acceptable dose fractionation schedules include 74 to 78 Gy in 37 to 39 fractions, 50 Gy in 16 fractions, and 20 fraction regimens with total dose of at least 55 Gy. However, the guidelines comment that despite extensive use of hypofractionated dose fractionation schedules, the number of reported series and trials is small.

In this model, preference was given to the recommendations of the Australian and New Zealand FROGG guidelines (19). For low risk prostate cancer, a dose of 70 Gy in 35 fractions was used in the model, with a sensitivity analysis performed to assess the impact of the range of number of fractions recommended in all the guidelines (16 to 44 fractions) on the average number of fractions per prostate cancer patient. For intermediate and high risk disease, a dose of 74 Gy in 37 fractions was used, with a sensitivity analysis performed to assess the impact of the range of number of fractions (16 to 44 fractions) on the average number of fractions per prostate cancer patient.

5. Stage T1-2N0M0 prostate cancer: proportion of patients with low risk versus intermediate or high risk disease

The NSW Prostate Cancer Care and Outcomes Study (PCOS) (45) described the patterns of care of all newly diagnosed prostate cancer patients aged up to 70 years from September 2000 to September 2002 in NSW. In this study, of the 715 patients with T1 prostate cancer, 689 patients (96%) had both PSA and Gleason score available. Of these 689 patients, 325 patients (47%) had low risk disease and 364 patients (53%) had intermediate or high risk disease (Table 4) (D. Smith, personal communication). These data were used in the model to divide patients with stage T1N0M0 prostate cancer receiving definitive radiotherapy into two branches: low risk disease (0.47) and intermediate/high risk disease (0.53).

Table 4. T1 prostate cancer, number of cases by PSA and Gleason score

	PSA <10	PSA ≥10	PSA missing
GS 6	325	62	16
GS ≥7	186	116	5
GS missing	4	1	0

In the same study, of the 591 patients with T2 prostate cancer, 585 patients (99%) had both PSA and Gleason score available. Of these 585 patients, 89 patients (15%) had T2a disease and PSA <10 and GS 6, i.e. low risk disease (Table 5) (D. Smith, personal communication). The remaining 496 patients (85%) either had T2b/T2c disease or PSA ≥10 or GS ≥7, putting them in the intermediate or high risk categories. These data were used in the model to divide patients with stage T2N0M0 prostate cancer receiving definitive radiotherapy into two branches: low risk disease (0.15) and intermediate/high risk disease (0.85).

Table 5. T2a prostate cancer, number of cases by PSA and Gleason score

	PSA <10	PSA ≥10	PSA missing
GS 6	89	33	1
GS ≥7	106	58	0
GS missing	2	0	0

6. Stage T1-2N0M0, good performance status, initial observation, progressive local or distant symptoms warranting radiotherapy: radiotherapy dose

Delaney et al (1, 27) made reference to several studies on patients who underwent observation as initial management (25, 46-50) and estimated that between 7% and 26% of patients should be treated with radiotherapy for local or distant progression, acknowledging that this was based on actual data rather than guideline recommendations. More recent published studies of observation

in prostate cancer reported similar rates of radiotherapy utilisation. Wu et al (51) reported on 8390 patients diagnosed with prostate cancer from 1990 to 2001 in the Department of Defense Center for Prostate Disease Research database, a multicentre national database comprising 9 combined United States Army, Navy and Air Force medical centres. Of these patients, 1158 chose observation as initial treatment. With a mean follow-up of 3.5 years, 127 patients (11%) had radiotherapy. Whether these patients underwent radiotherapy for local or distant progression was not reported.

Klotz et al (52) reported on a prospective, single-arm, cohort study of 450 patients who were observed with active surveillance in Toronto, Canada. After a median follow-up of 6.8 years, 90 patients (20%) had radiotherapy with or without hormonal therapy. Again, it was unclear whether patients had radiotherapy for local or distant progression.

Of all identified studies, only one study reported on whether patients had radical radiotherapy for local disease or palliative radiotherapy for distant progression. Zietman et al (25) reported on 199 patients with T1-2 prostate cancer and PSA < 20 who elected for observation. Median follow up was 3.4 years. All 29 patients (15%) who underwent radiotherapy had treatment with radical intent (i.e. for local disease).

Shappley et al (26) reported on 3331 patients diagnosed with prostate cancer from 1986 to 2007 in the Health Professionals Follow-up Study, a prospective, nationwide, cohort study comprising 51529 male health professionals. Of these patients, 342 initially deferred active treatment. Mean follow-up was 8.3 years. Seventy-two patients (21%) subsequently had radiotherapy with or without hormonal therapy. Although the proportion of patients having radiotherapy for local progression or distant progression was not reported, it was reported that 20 patients developed metastases. If it is assumed that all 20 patients with metastases required radiotherapy, then 20 of 72 patients (28%) had radiotherapy for distant progression and 52 of 72 patients (72%) had radiotherapy for local progression.

In this model, patients recommended to have radiotherapy after initial observation were divided into two branches: radiotherapy for local progression (1.0) and radiotherapy for distant progression (0), using the data reported by Zietman et al (25) as the epidemiological data in the tree. A sensitivity analysis was performed varying the proportion of patients having radiotherapy for local progression from 100% (based on data from Zietman et al (25)) to 72% (based on data from Shappley et al (26), assuming all patients with metastases required radiotherapy).

For patients recommended to have radiotherapy for local progression, the dose fractionation schedule, 70 Gy in 35 fractions, was used in the model. A sensitivity analysis was performed to assess the impact of the range of number of fractions (16 to 44 fractions) on the average number of fractions per prostate cancer patient (see note 4). For patients recommended to have radiotherapy for distant progression, the dose fractionation schedule, 8 Gy in 1 fraction, was used in the model (for bone metastases, see note 8).

7. Stage T1-4N0M0, poor performance status, progressive local or distant symptoms warranting radiotherapy: radiotherapy dose

No studies were identified containing data on the proportion of patients treated with radiotherapy for local or distant progression respectively in this group of patients.

The dose fractionation schedule, 8 Gy in 1 fraction, was used in the model for patients having radiotherapy for bone metastases (see note 8). No guidelines or high level evidence exist as to the optimal palliative dose for local disease for these patients. A commonly used palliative regimen, 30 Gy in 10 fractions, was used for these patients in the model.

For this branch of the tree, dose fractionation schedules ranged from 8 Gy in 1 fraction to 30 Gy in 10 fractions. The dose fractionation schedule, 8 Gy in 1 fraction, was used in the model. A sensitivity analysis was performed to assess

the impact of the range of number of fractions (1 to 10 fractions) on the average number of fractions per prostate cancer patient.

8. Bone pain: radiotherapy dose

A single fraction of 8 Gy was used in this model. A sensitivity analysis was performed to assess the impact of the range of number of fractions (1 to 5 fractions) on the average number of fractions per prostate cancer patient (see chapter 18).

Sensitivity Analysis

The optimal number of fractions per prostate cancer patient was 13.3.

As discussed by Delaney et al (1, 27), in the optimal radiotherapy utilisation model there were several data elements where there was uncertainty because of different proportions reported in the literature or due to lack of data to support a particular use of radiotherapy. These included the proportion of patients with T1N0M0 prostate cancer undergoing surgery (0.1 to 0.7), the proportion of patients with T1N0M0 prostate cancer with positive margins after surgery (0 to 0.22), the proportion of patients with T2N0M0 prostate cancer undergoing surgery (0.1 to 0.7), the proportion of patients with T2N0M0 prostate cancer with positive margins after surgery (0 to 0.35), the proportion of patients with T1-2N0M0 prostate cancer who progress after initial observation (0.07 to 0.26) and the proportion of patients with T1-2N0M0 prostate cancer who develop distant relapse after surgery (0.04 to 0.15).

There was also uncertainty regarding the proportion of patients with T1-2N0M0 prostate cancer who progress after initial observation who have local disease progression (0.72 to 1).

In addition, there was a range of number of fractions considered appropriate for adjuvant radiotherapy for positive margins post-prostatectomy (30 to 32 fractions), salvage radiotherapy for PSA only recurrence after initial surgery (30

to 33 fractions), definitive radiotherapy for low risk prostate cancer (16 to 44 fractions), definitive radiotherapy for intermediate and high risk prostate cancer (16 to 44 fractions), definitive radiotherapy for progressive local disease in patients with T1-2N0M0 prostate cancer with good performance status after initial observation (16 to 44 fractions), radiotherapy for progressive local or distant symptoms in patients with T1-4N0M0 prostate cancer with poor performance status (1 to 10 fractions), and radiotherapy for bone metastases (1 to 5 fractions).

A one-way sensitivity analysis was performed for each of these variables to assess the impact of these uncertainties on the average number of radiotherapy fractions in prostate cancer patients. The average number of radiotherapy fractions varied between 11 and 16.8, as shown in the tornado diagram below (Fig. 1). The optimal fractionation tree for prostate cancer is shown in Figs. 2-5.

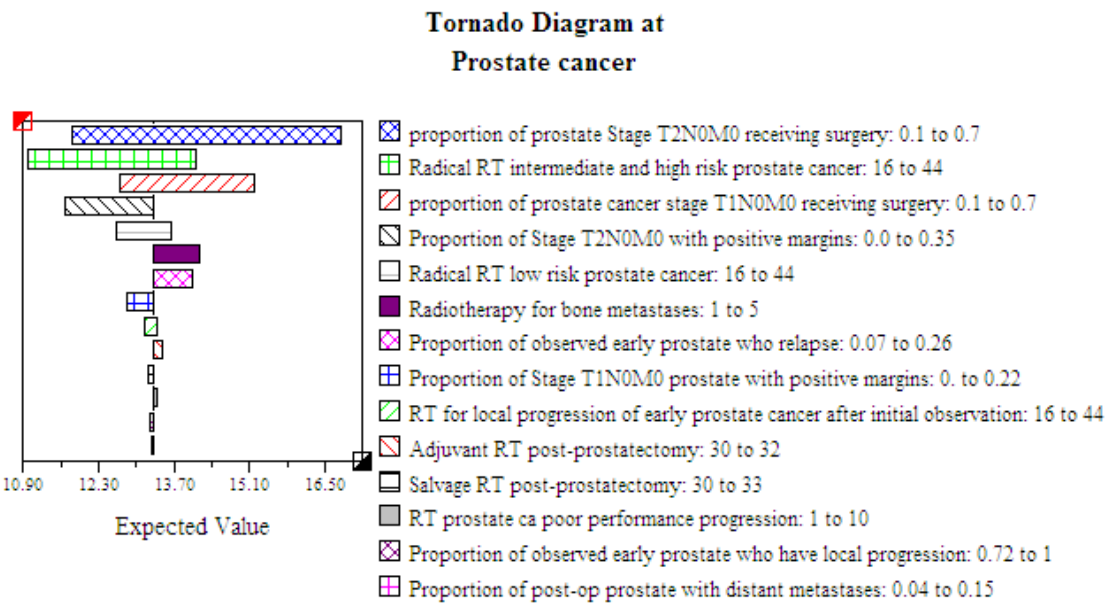

Figure 1. Prostate cancer. Sensitivity analysis

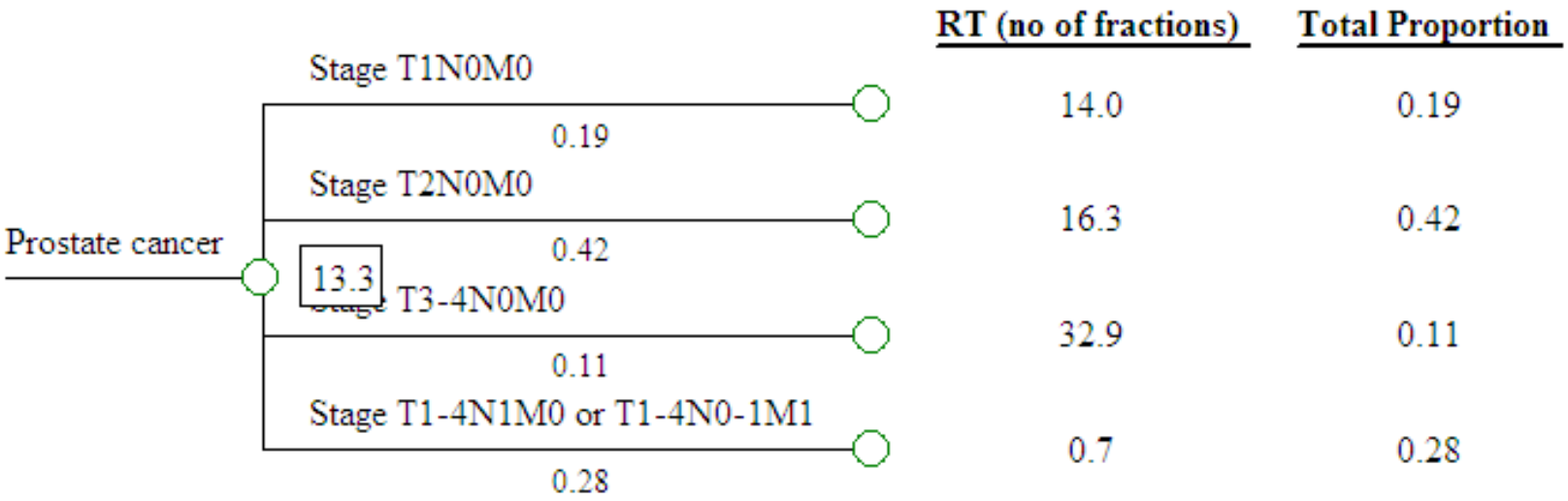

Figure 2. Prostate cancer. Optimal fractionation tree

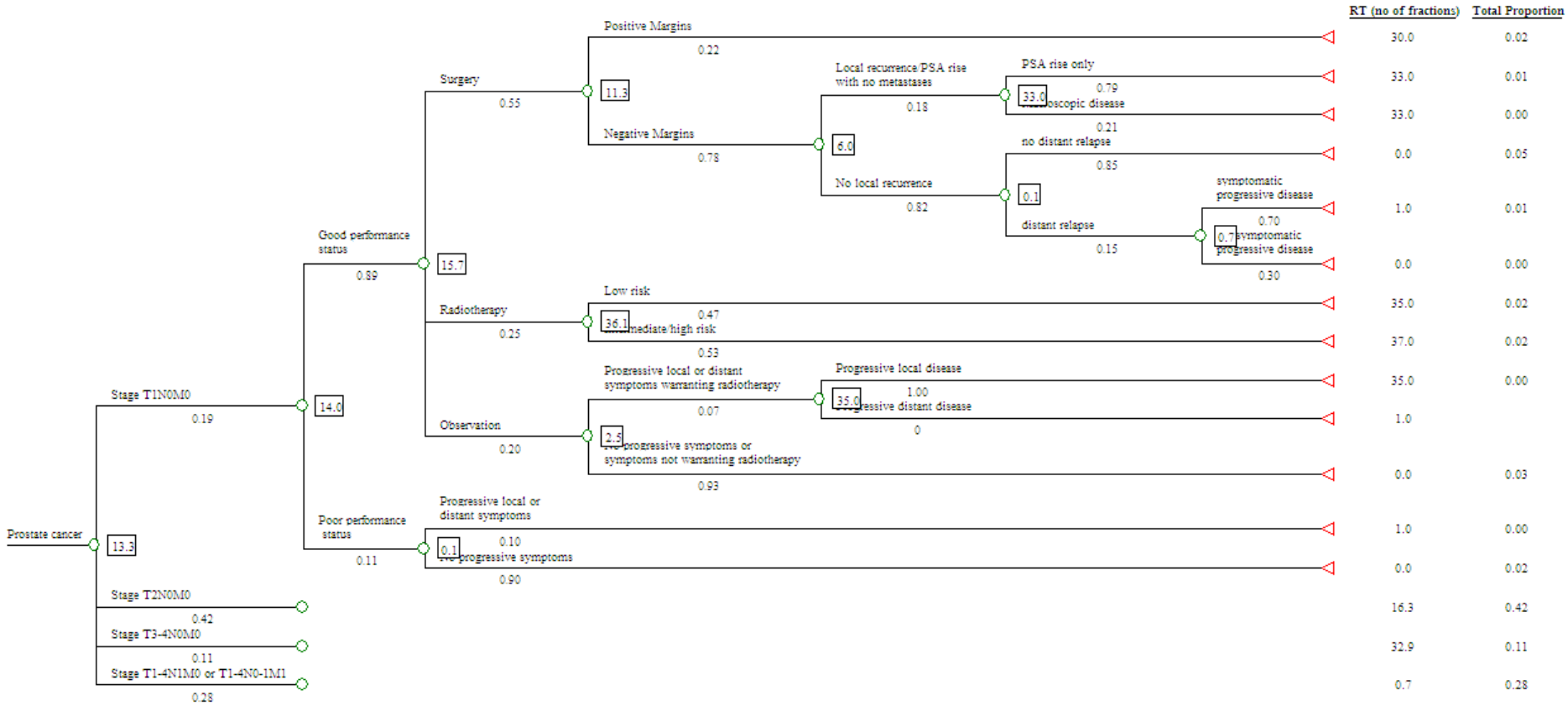

Figure 3. T1N0M0 prostate cancer. Optimal fractionation tree

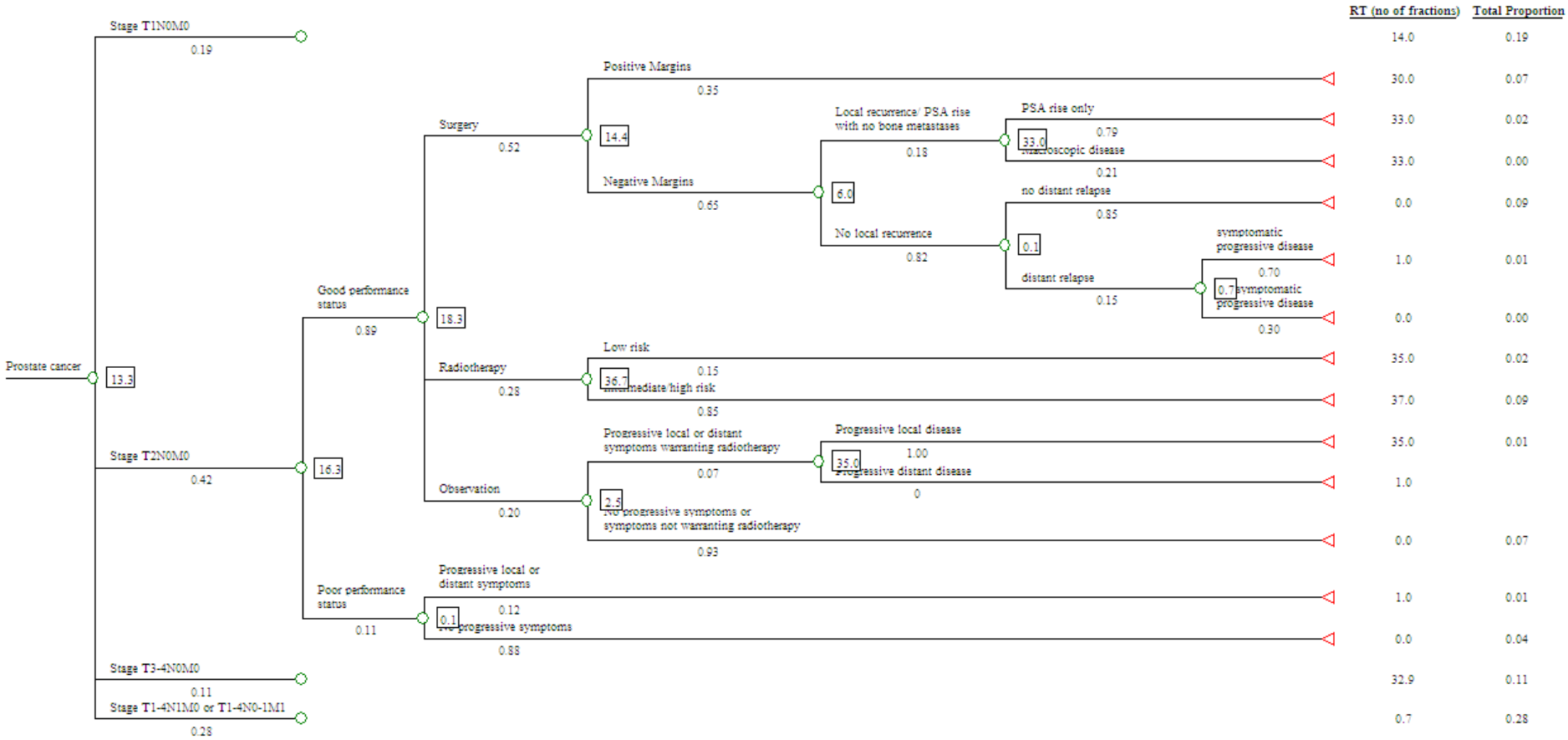

Figure 4. T2N0M0 prostate cancer. Optimal fractionation tree

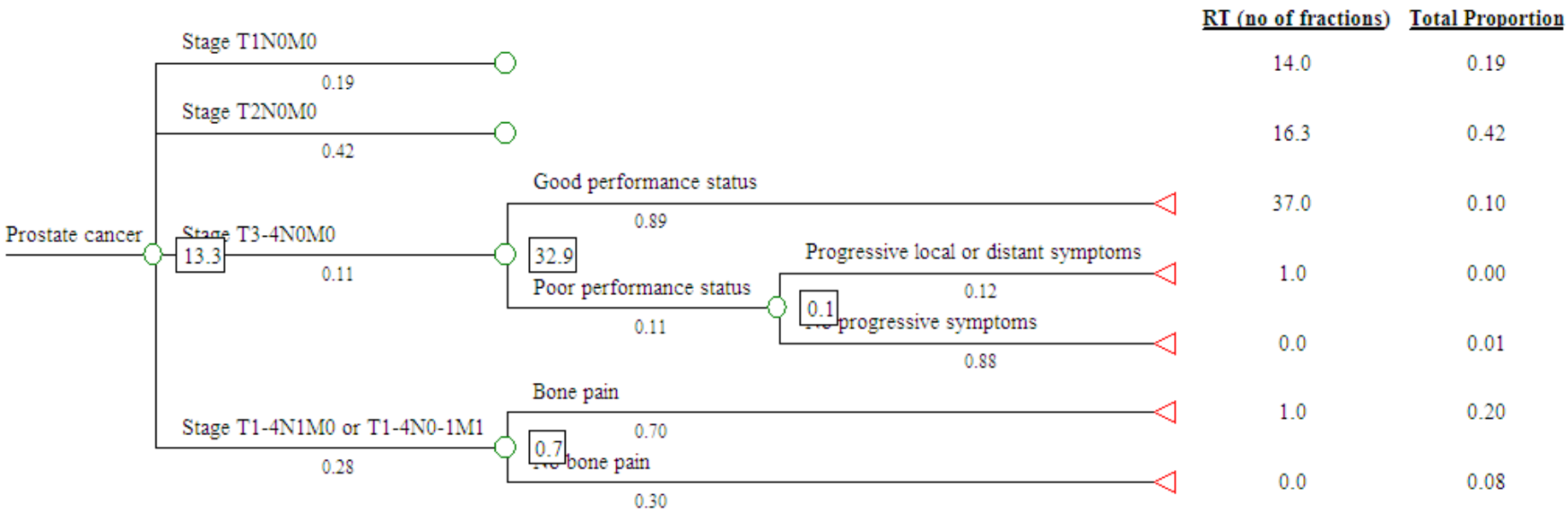

Figure 5. T3-4N0M0 and T1-4N1M0 or T1-4N0-1M1 prostate cancer. Optimal fractionation tree

3.2 Renal Cancer

Table 1. Renal Cancer. Number of fractions of radiotherapy – Sources of evidence

Outcome no (utilisation model)	Clinical scenario (utilisation model)	Outcome no (fractionation model)	Clinical scenario (addition to fractionation model)	No of fractions	Range of no of fractions	Level of evidence	References	Notes	Proportion of all renal cancer patients
2	TxNxM0, fit for surgery, no local recurrence, distant recurrence, brain metastases	1	TxNxM0, fit for surgery, distant recurrence, brain metastases	5	5-10	II	RCR guidelines (18)	2, 5	0.02
3	TxNxM0, fit for surgery, no local recurrence, distant recurrence, no brain metastases, painful bone metastases	2	TxNxM0, fit for surgery, distant recurrence, no brain metastases, painful bone metastases	1	1-5	I	RCR guidelines (18)	2, 6	0.07
7	TxNxM1, no symptomatic primary, brain metastases	6	–	5	5-10	II	RCR guidelines (18)	5	0.03
8	TxNxM1, no symptomatic primary,	7	–	1	1-5	I	RCR guidelines (18)	6	0.11

Outcome no (utilisation model)	Clinical scenario (utilisation model)	Outcome no (fractionation model)	Clinical scenario (addition to fractionation model)	No of fractions	Range of no of fractions	Level of evidence	References	Notes	Proportion of all renal cancer patients
	no brain metastases, painful bone metastases								
9	TxNxM1, no symptomatic primary, no brain metastases, no bone metastases, symptomatic lymph node or skin metastases	8	–	5	–	III	Wilson et al (53)	3	0.02
11	TxNxM1, symptomatic primary	10	–	5	–	–	–	4	0

Proportion of all renal cancer patients in whom radiotherapy is recommended	**0.25 (25%)**
Proportion of all cancer patients = 0.25 x 0.02 =	**0.005 (0.5%)**
Average number of fractions per renal cancer patient	**0.5**
Average number of fractions per treatment course = 0.5/0.25 =	**2**

Key to abbreviations in renal cancer decision tree and tables

RCR – Royal College of Radiologists

Table 2. Renal Cancer. The incidence of attributes used to define number of radiotherapy fractions

Key	Population or subpopulation of interest	Attribute	Proportion of populations with this attribute	Quality of Information	References	Notes
A	All registry cancers	Renal cancer	0.02	α	AIHW (16)	1

Renal Cancer

The optimal radiotherapy fractionation model for renal cancer was based on the optimal radiotherapy utilisation model for genitourinary cancer (1, 27).

Treatment Guidelines

The following clinical practice guidelines for the management of renal cancer were identified:

- NCCN clinical practice guidelines on renal cancer (version 1.2011) (54)
- NCI PDQ guidelines on renal cell cancer (2010) (55)
- BC Cancer Agency genitourinary cancer management guidelines (kidney) (2009) (56)
- Cancer Care Nova Scotia guidelines for the management of kidney cancer (2004) (57)

Explanatory Notes for Tables 1 and 2

1. Incidence of renal cancer

Renal cancer constituted 2.3% of all cancers occurring in Australia in 2005 (16).

2. Radiotherapy for isolated local recurrence post-nephrectomy

In the optimal radiotherapy utilisation model (1, 27), patients with isolated local recurrence post-nephrectomy were recommended to have radiotherapy. In that study, it was discussed that the treatment guidelines reviewed at that time differed as to whether radiotherapy should be recommended in this clinical situation, so sensitivity analysis was conducted, including the possibility that radiotherapy was not used, to assess the effect on the radiotherapy utilisation rate.

On review of the current treatment guidelines, radiotherapy is not recommended for these patients. Therefore radiotherapy was not recommended for patients with isolated local recurrence post-nephrectomy in this model.

3. Radiotherapy for symptomatic skin and nodal metastases

The BC Cancer Agency guidelines (56) and the Cancer Care Nova Scotia guidelines (57) recommend radiotherapy for palliation of symptoms from metastases but have not made specific recommendations on dose fractionation schedules.

Renal cancer is considered relatively radioresistant. Studies have reported conflicting results on the effect of radiotherapy dose escalation on palliation of patients with metastatic renal cancer (53, 58-60). Onufrey and Mohiuddin (59) reviewed the outcomes of 125 patients treated in the Department of Radiation Therapy at Thomas Jefferson University Hospital, USA. The majority of patients received treatment for bone metastases and soft tissue masses, and received doses of 20 to 60 Gy. Radiotherapy schedules were converted to a time dose fractionation (TDF) equivalent value taking into account total treatment time, total dose and number of fractions. The results indicated a significantly higher response rate of 65% for doses equal to or greater than a TDF of 70. DiBiase et al (60) reported a symptomatic response rate of 86% in 107 patients with metastatic renal cancer who had 150 sites treated with palliative radiotherapy. Forty-nine percent of patients had a complete palliative response, and a biological effective dose of equal to or greater than 50.5 Gy_{10} was associated with a statistically significant increased rate of complete response. On the contrary, Halperin et al (58) found no correlation between TDF equivalent dose and palliative response rate in 35 patients who had 60 metastatic sites irradiated. A more recent study was reported by Wilson et al (53) who reviewed 78 patients treated with palliative radiotherapy from 1995 to 2001 at the University Hospital Birmingham, UK. A total of 143 palliative radiotherapy courses were delivered, the majority to the bone and soft tissue masses. The median total dose was 20 Gy (range 4-55 Gy), and the median number of fractions was 5 (range 1-25). Overall symptomatic response rate was 73%. The

results showed that a higher biological effective dose did not seem to be a predictor of response or of duration of response in palliation of metastatic renal cancer.

Since there is no definite evidence that there is a dose response in metastatic renal cancer, the dose fractionation schedule, 20 Gy in 5 fractions, was used in this model.

4. Radiotherapy for patients with metastatic disease with a symptomatic primary

The NCI guidelines (55) recommend that for patients with metastatic disease, tumour embolisation, radiotherapy and nephrectromy can palliate symptoms of the primary tumour. The BC Cancer Agency guidelines (56) and the Cancer Care Nova Scotia guidelines (57) also state that radiotherapy may be used to control bleeding and pain from the primary tumour. No specific dose fractionation schedules are recommended in the guidelines.

No dose response studies on palliation of the primary lesion in patients with metastatic renal cancer were identified but it is reasonable to assume that primary tumours have a similar response to palliative radiotherapy as metastases. The dose fractionation schedule, 20 Gy in 5 fractions, was used in this model for patients with metastatic disease with a symptomatic primary.

5. Radiotherapy for brain metastases

The dose fractionation schedule, 20 Gy in 5 fractions, was used in this model. A sensitivity analysis was conducted to assess the impact of the range of number of fractions (5 to 10 fractions) on the average number of fractions per renal cancer patient (see chapter 18).

6. Radiotherapy for bone metastases

A single fraction of 8 Gy was used in this model. A sensitivity analysis was performed to assess the impact of the range of number of fractions (1 to 5 fractions) on the average number of fractions per renal cancer patient (see chapter 18).

Sensitivity Analysis

The optimal number of fractions per renal cancer patient was 0.5.

In the optimal radiotherapy utilisation model (1, 27), there was uncertainty whether patients with metastatic renal cancer who have symptoms of primary disease should be treated with radiotherapy, as there are other treatment options such as surgery, so a sensitivity analysis was conducted with the proportion of these patients having radiotherapy varied between 0% and 100%. In addition, there was variation reported in the literature regarding the proportion of patients who develop distant metastases after nephrectomy (0.23 to 0.58) and the proportion of patients with metastatic disease who have brain metastases (0.07 to 0.19), and a sensitivity analysis was conducted to assess the impact of these uncertainties on the optimal radiotherapy utilisation rate.

In terms of dose fractionation schedules, a range of number of fractions was considered appropriate for palliative radiotherapy for brain metastases (5 to 10 fractions) and bone metastases (1 to 5 fractions).

A one-way sensitivity analysis was performed for each of these variables to assess the impact of these uncertainties on the average number of radiotherapy fractions in renal cancer patients. The average number of radiotherapy fractions varied between 0.5 and 1.2, as shown in the tornado diagram below (Fig. 1). The optimal fractionation tree for renal cancer is shown in Fig. 2.

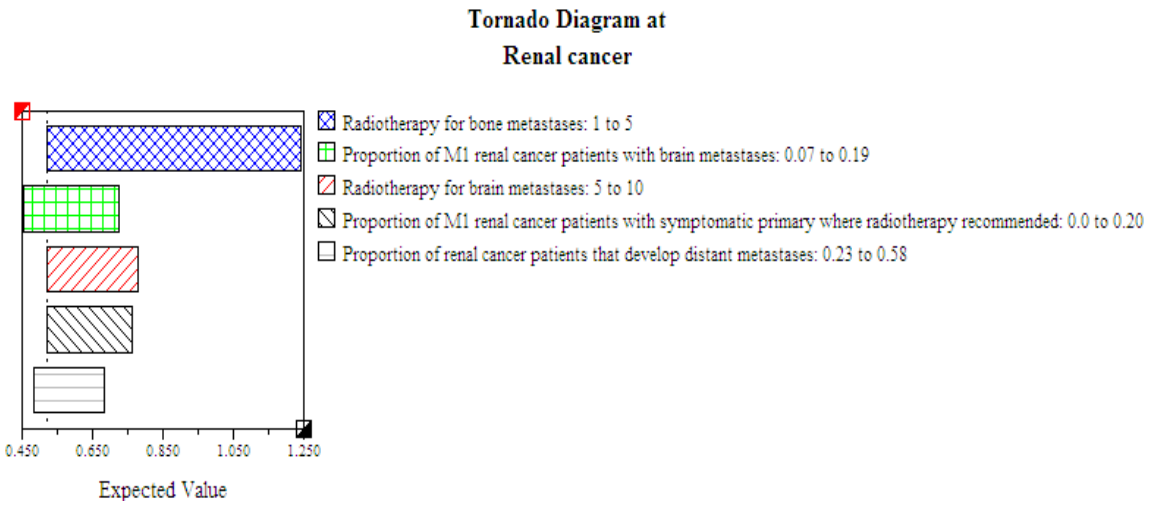

Figure 1. Renal cancer. Sensitivity analysis

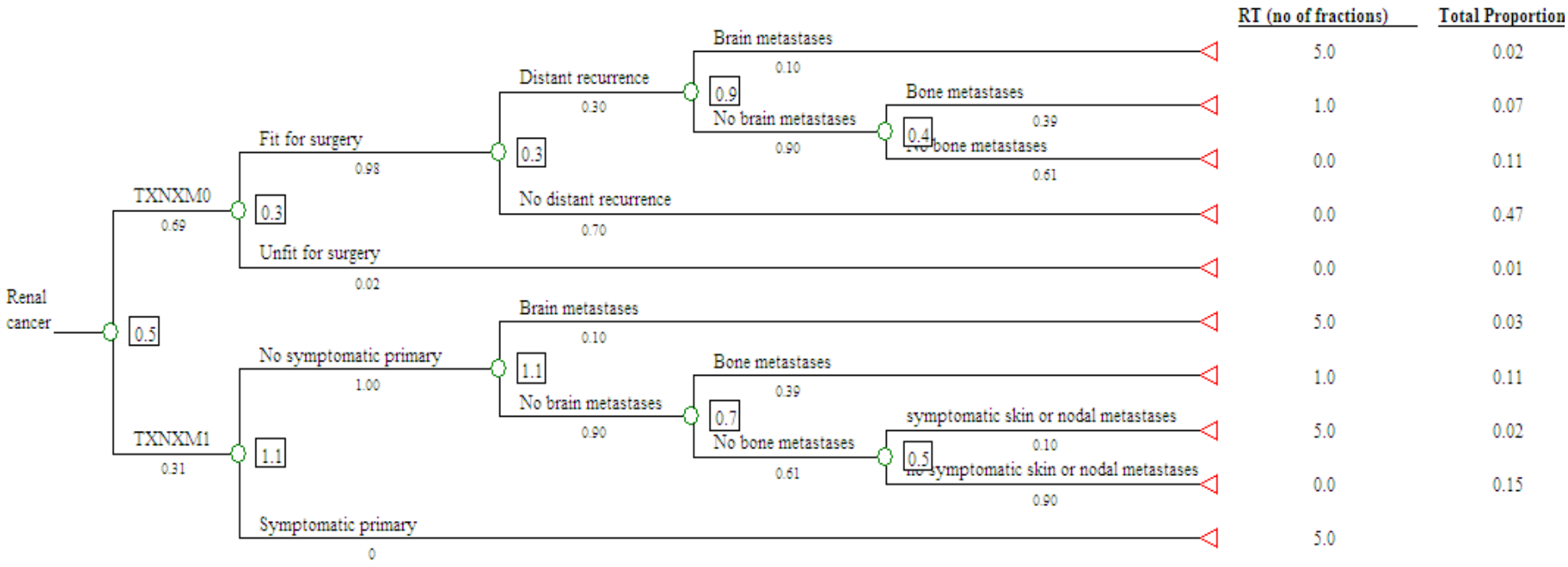

Figure 2. Renal cancer. Optimal fractionation tree

3.3 Bladder Cancer

Table 1. Bladder Cancer. Number of fractions of radiotherapy – Sources of evidence

Outcome no (utilisation model)	Clinical scenario (utilisation model)	Outcome no (fractionation model)	Clinical scenario (addition to fractionation model)	No of fractions	Range of no of fractions	Level of evidence	References	Notes	Proportion of all bladder cancer patients
1	Stage I, local recurrence after conservative treatment, cystectomy, local recurrence after cystectomy	1	−	3	−	−	RCR guidelines (18) SIGN guidelines (61)	4	<0.01
2	Stage I, local recurrence after conservative treatment, cystectomy, no local recurrence, distant recurrence, brain metastases	2	−	5	5−10	II	RCR guidelines (18)	5	<0.01

Outcome no (utilisation model)	Clinical scenario (utilisation model)	Outcome no (fractionation model)	Clinical scenario (addition to fractionation model)	No of fractions	Range of no of fractions	Level of evidence	References	Notes	Proportion of all bladder cancer patients
3	Stage I, local recurrence after conservative treatment, cystectomy, no local recurrence, distant recurrence, no brain metastases, painful bone metastases	3	−	1	1−5	I	RCR guidelines (18)	6	<0.01
6	Stage I, local recurrence after conservative treatment, no cystectomy	6	Radical radiotherapy	20	20−33	II	NCCN guidelines (62) RCR guidelines (18) SIGN guidelines (61)	2	0.03
		7	Palliative radiotherapy	3	−	II	RCR guidelines (18) SIGN guidelines (61)	4	0.03
7	Stage I, no local recurrence after conservative	8	−	5	5−10	II	RCR guidelines (18)	5	<0.01

Outcome no (utilisation model)	Clinical scenario (utilisation model)	Outcome no (fractionation model)	Clinical scenario (addition to fractionation model)	No of fractions	Range of no of fractions	Level of evidence	References	Notes	Proportion of all bladder cancer patients
	treatment, distant recurrence, brain metastases								
8	Stage I, no local recurrence after conservative treatment, distant recurrence, no brain metastases, painful bone metastases	9	−	1	1−5	I	RCR guidelines (18)	6	0.01
11	Stages II-III, cystectomy, local recurrence	12	−	3	−	−	RCR guidelines (18) SIGN guidelines (61)	4	<0.01
12	Stages II-III, cystectomy, no local recurrence, distant recurrence, brain	13	−	5	5−10	II	RCR guidelines (18)	5	<0.01

Outcome no (utilisation model)	Clinical scenario (utilisation model)	Outcome no (fractionation model)	Clinical scenario (addition to fractionation model)	No of fractions	Range of no of fractions	Level of evidence	References	Notes	Proportion of all bladder cancer patients
	metastases								
13	Stages II-III, cystectomy, no local recurrence, distant recurrence, no brain metastases, painful bone metastases	14	−	1	1−5	I	RCR guidelines (18)	6	<0.01
16	Stages II-III, medically inoperable	17	Radical radiotherapy	20	20−33	II	NCCN guidelines (62) RCR guidelines (18) SIGN guidelines (61)	2	0.19
		18	Palliative radiotherapy	3	−	II	RCR guidelines (18) SIGN guidelines (61)	4	0.19
17	Stage IV, symptomatic primary	19	−	3	−	II	RCR guidelines (18) SIGN guidelines (61)	4	0.07
18	Stage IV, no symptomatic primary, brain metastases	20	−	5	5−10	II	RCR guidelines (18)	5	0.01

Outcome no (utilisation model)	Clinical scenario (utilisation model)	Outcome no (fractionation model)	Clinical scenario (addition to fractionation model)	No of fractions	Range of no of fractions	Level of evidence	References	Notes	Proportion of all bladder cancer patients
19	Stage IV, no symptomatic primary, no brain metastases, painful bone metastases	21	−	1	1−5	I	RCR guidelines (18)	6	0.03

Proportion of all bladder cancer patients in whom radiotherapy is recommended	**0.58 (58%)**
Proportion of all cancer patients = 0.58 x 0.023 =	**0.013 (1.3%)**
Average number of fractions per bladder cancer patient	**5.5**
Average number of fractions per treatment course = 5.5/0.58 =	**9.5**

Key to abbreviations in bladder cancer decision tree and tables

RCR – Royal College of Radiologists

SIGN – Scottish Intercollegiate Guidelines Network

NCCN – National Comprehensive Cancer Network

Table 2. Bladder Cancer. The incidence of attributes used to define number of radiotherapy fractions

Key	Population or subpopulation of interest	Attribute	Proportion of populations with this attribute	Quality of Information	References	Notes
A	All registry cancers	Bladder cancer	0.02	α	AIHW (16)	1
B	Bladder cancer, Stage I treated with intra-vesical therapy and/or local excision, local recurrence, not treated with cystectomy	Radical radiotherapy	0.50 0.67	β ε	Millar et al (63) Hayter et al (64)	3
C	Bladder cancer, Stages II-III, inoperable	Radical radiotherapy	0.50 0.67	β ε	Millar et al (63) Hayter et al (64)	3

Bladder Cancer

The optimal radiotherapy fractionation model for bladder cancer was based on the optimal radiotherapy utilisation model for genitourinary cancer (1, 27).

Treatment Guidelines

The following clinical practice guidelines for the management of bladder cancer were identified:

- NCCN clinical practice guidelines on bladder cancer (version 1.2011) (62)
- NCI PDQ guidelines on bladder cancer (2010) (65)
- BC Cancer Agency genitourinary cancer management guidelines (bladder) (2008) (66)
- RCR radiotherapy dose-fractionation guidelines (2006) (18)
- Scottish Intercollegiate Guidelines Network (SIGN) guidelines on management of transitional cell carcinoma of the bladder (2005) (61)

Explanatory Notes for Tables 1 and 2

1. Incidence of bladder cancer

Bladder cancer constituted 2.3% of all cancers occurring in Australia in 2005 (16).

2. Radical radiotherapy for bladder cancer: radiotherapy dose

The NCCN clinical practice guidelines on bladder cancer (62) recommend treating the whole bladder with or without pelvic lymph nodes to a dose of 40 to 45 Gy and then boosting the bladder tumour to a total dose of 64 to 66 Gy. Given in 2 Gy per fraction, this dose is delivered in 32 to 33 fractions.

The SIGN guidelines on management of transitional cell carcinoma of the bladder (61) state that commonly used radical radiotherapy schedules include 50 to 55 Gy in 20 fractions and 64 to 66 Gy in 32 to 33 fractions. The guidelines recommend a minimum dose of 50 Gy in 20 fractions or 64 Gy in 32 fractions. The RCR dose-fractionation guidelines (18) state that for radical radiotherapy to the bladder only, regimens of 50 to 52.5 Gy in 20 fractions are neither better nor worse than regimens of 60 to 64 Gy in 30 to 32 fractions when using modern planning and conformal techniques, making reference to the Radiation Therapy Oncology Group (RTOG) 7104 study (67) which showed no difference in tumour control and side-effects when 55 Gy in 20 fractions was compared to 60 Gy in 30 fractions, and a small randomised study comparing 50 Gy in 20 fractions, 52.5 Gy in 20 fractions and 57.5 Gy in 20 fractions which showed unacceptably high morbidity in the patients who received 57.5 Gy in 20 fractions (68).

In this model, the shortest dose fractionation schedule recommended in the guidelines, 50 Gy in 20 fractions, was used in patients recommended to have radical radiotherapy. A sensitivity analysis was performed to assess the impact of the range of number of fractions (20 to 33 fractions) on the average number of fractions per bladder cancer patient.

3. Radiotherapy for stage II-III bladder cancer and locally recurrent disease after initial conservative management for stage I bladder cancer: proportion of patients having radical versus palliative radiotherapy

A significant proportion of bladder cancer patients will not be fit to undergo a radical course of radiotherapy due to age or co-morbidities. Millar et al (63) reviewed the management and outcome of 743 patients with muscle-invasive bladder cancer diagnosed in Victoria, Australia, between 1990 and 1995. Of the patients with stage II or III disease, 259 underwent radiotherapy. Of these, 124 patients (50%) were treated with radical intent and 125 patients (50%) were treated with palliative intent. Hayter et al (64) reviewed the management and outcome of 20822 bladder cancer patients diagnosed in Ontario, Canada, from 1982 to 1994. Of these patients, 1229 patients had radiotherapy to the bladder

or pelvis as their initial treatment. Of these, 822 (67%) had radiotherapy with curative intent.

In this model, the data from Millar et al (63) were used to divide patients with stage II-III bladder cancer recommended to have radiotherapy into two branches: those treated with radical intent (0.50) and those treated with palliative intent (0.50), since these data represented Australian practice. A sensitivity analysis was performed to assess the impact of this data variation on the average number of fractions per bladder cancer patient. A limitation is that these data represent actual practice rather than being based on guideline recommendations, and may underestimate the optimal proportion of patients who should receive radical radiotherapy, however these are the best available data identified.

No data on the proportion of patients with locally recurrent disease after initial conservative management for stage I bladder cancer treated with radical or palliative radiotherapy were found despite an extensive literature search. The same data used for patients with stage II-III bladder cancer were used to divide patients with locally recurrent bladder cancer recommended to have radiotherapy into two branches: those treated with radical intent (0.50) and those treated with palliative intent (0.50).

4. Palliative radiotherapy for bladder cancer: radiotherapy dose

The RCR dose-fractionation guidelines (18) recommend the dose fractionation schedule, 21 Gy in 3 fractions on alternate days in 1 week, as the regimen of choice for the palliation of local symptoms from bladder cancer. The SIGN guidelines (61) also recommend that the dose fractionation schedule, 21 Gy in 3 fractions in 1 week, should be considered for palliation of patients with bladder cancer. Both guidelines make reference to the Medical Research Council (MRC) BA 09 study (69). In this multi-centre randomised controlled trial, patients considered unsuitable for curative treatment due to disease stage or co-morbidity were randomised to two radiotherapy dose fractionation schedules, 35 Gy in 10 fractions over 2 weeks or 21 Gy in 3 fractions on alternate days over 1

week. A total of 500 patients were recruited but data on symptomatic improvement at 3 months were only available on 272 patients. Of these, 68% achieved symptomatic improvement (71% for 35 Gy, 64% for 21 Gy), with no evidence of a difference in efficacy or toxicity between the two arms. There was also no evidence of a difference in survival between the two arms.

In the model, the dose fractionation schedule, 21 Gy in 3 fractions, was used for patients with stage IV bladder cancer with symptomatic primary disease, and patients with non-metastatic bladder cancer unfit for radical treatment.

No specific dose fractionation schedules are recommended in the guidelines for patients with local recurrence after cystectomy. The same dose fractionation schedule, 21 Gy in 3 fractions, was used in this model for these patients.

5. Palliative radiotherapy for brain metastases: radiotherapy dose

The dose fractionation schedule, 20 Gy in 5 fractions, was used in this model. A sensitivity analysis was performed to assess the impact of the range of number of fractions (5 to 10 fractions) on the average number of fractions per bladder cancer patient (see chapter 18).

6. Palliative radiotherapy for bone metastases: radiotherapy dose

A single fraction of 8 Gy was used in this model. A sensitivity analysis was performed to assess the impact of the range of number of fractions (1 to 5 fractions) on the average number of fractions per bladder cancer patient (see chapter 18).

Sensitivity Analysis

The optimal number of fractions per bladder cancer patient was 5.5.

As discussed by Delaney et al (1, 27), there were several data elements in the optimal radiotherapy utilisation model where there was uncertainty. These

included the proportion of patients with stage II-III bladder cancer in whom surgery is appropriate (0 to 0.47), the proportion of patients with stage IV disease with brain metastases (0.01 to 0.12) and the proportion of patients with stage IV disease with bone metastases (0.18 to 0.43).

In addition, there was uncertainty regarding the proportion of patients with stage II-III bladder cancer and locally recurrent disease after initial conservative management for stage I bladder cancer recommended to have radical radiotherapy (0.50 to 0.67). There was also a range of number of fractions considered appropriate for radical radiotherapy for bladder cancer (20 to 33 fractions), palliative radiotherapy for brain metastases (5 to 10 fractions), and for bone metastases (1 to 5 fractions).

A one-way sensitivity analysis was performed for each of these variables to assess the impact of these uncertainties on the average number of radiotherapy fractions in bladder cancer patients. The average number of radiotherapy fractions varied between 3.5 and 8.4, as shown in the tornado diagram below (Fig. 1). This variation is largely due to the range of number of fractions considered appropriate for radical radiotherapy for bladder cancer. The optimal fractionation tree for bladder cancer is shown in Figs. 2-4.

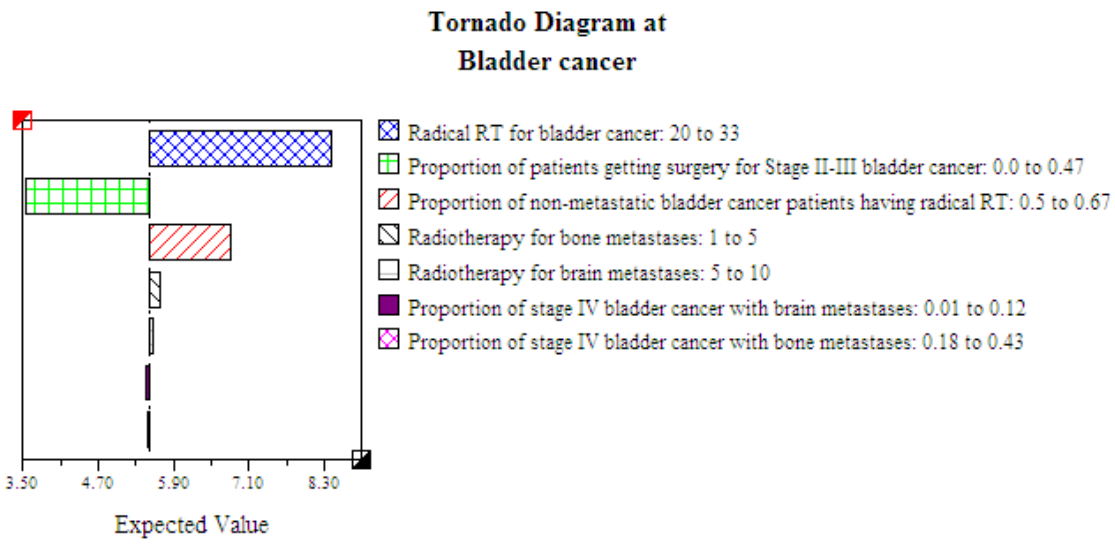

Figure 1. Bladder cancer. Sensitivity analysis

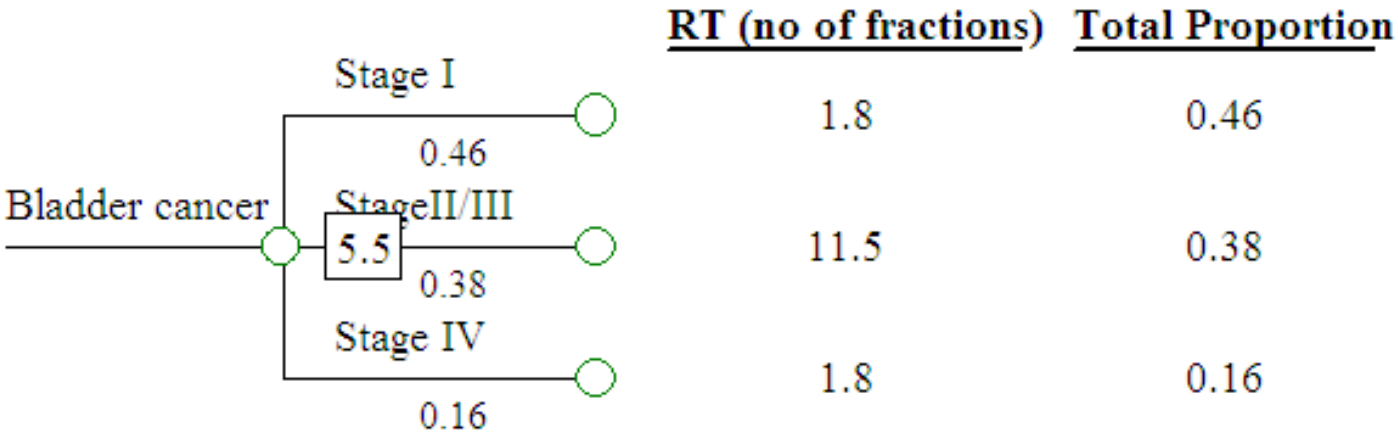

Figure 2. Bladder cancer. Optimal fractionation tree

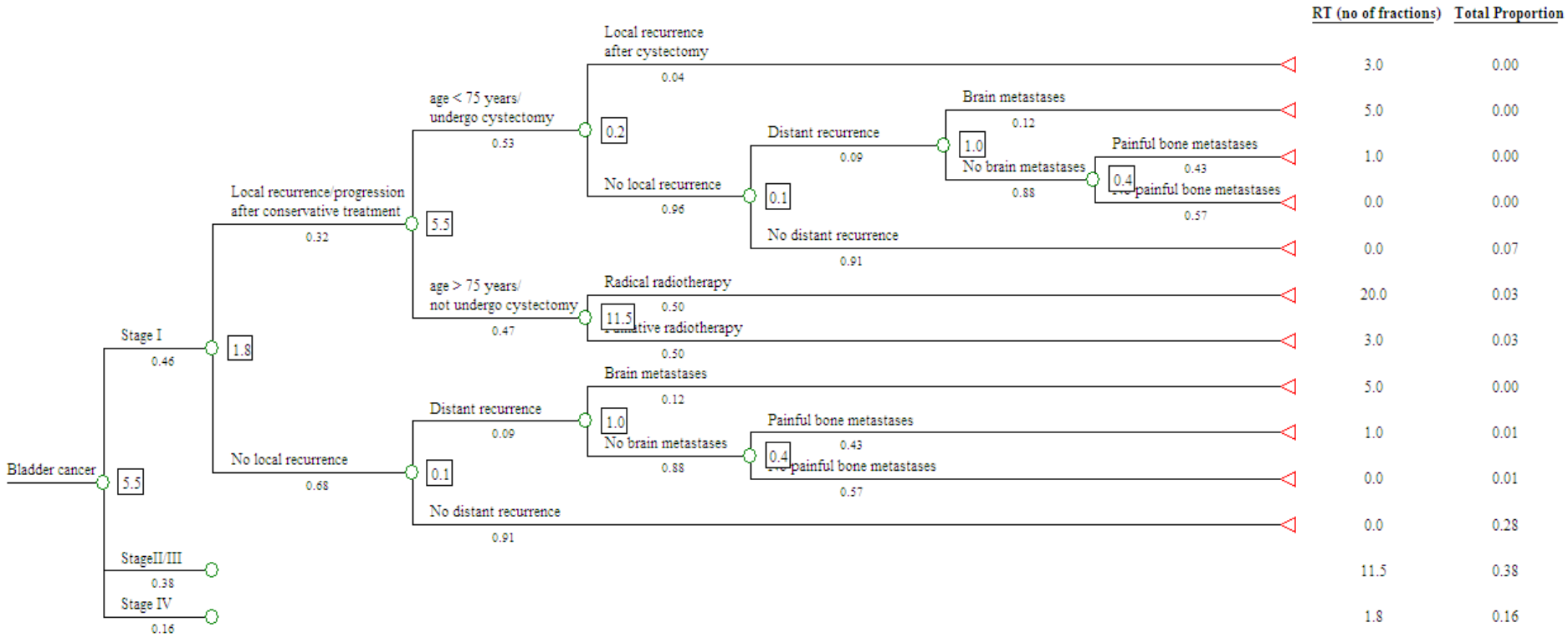

Figure 3. Stage I bladder cancer. Optimal fractionation tree

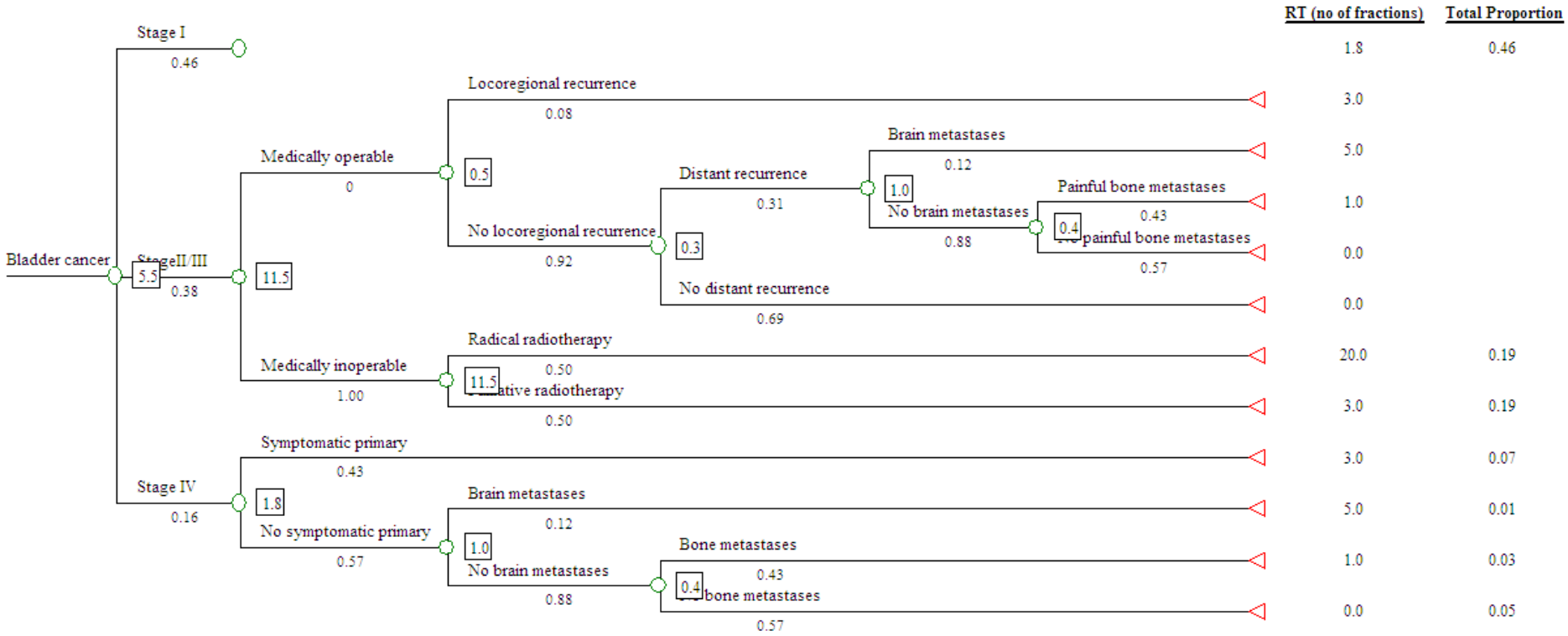

Figure 4. Stage II-IV bladder cancer. Optimal fractionation tree

3.4 Testicular Cancer

Table 1. Testicular Cancer. Number of fractions of radiotherapy - Sources of evidence

Outcome no (utilisation model)	Clinical scenario (utilisation model)	Outcome no (fractionation model)	Clinical scenario (addition to fractionation model)	No of fractions	Range of no of fractions	Level of evidence	References	Notes	Proportion of all testicular cancer patients
1	Seminoma, stage I, radiotherapy	1	−	10	8–20	II	NCCN guidelines (70) NCI guidelines (71) Canadian consensus guidelines (72) BCCA guidelines (73) Cancer Care Nova Scotia guidelines (74) RCR guidelines (18) EAU guidelines (75) ESMO guidelines (76) EGCCCG guidelines (77)	4	0.21
2	Seminoma, stage I, observation, nodal recurrence	3	−	15	15−25	−	−	5	0.01

Outcome no (utilisation model)	Clinical scenario (utilisation model)	Outcome no (fractionation model)	Clinical scenario (addition to fractionation model)	No of fractions	Range of no of fractions	Level of evidence	References	Notes	Proportion of all testicular cancer patients
3	Seminoma, stage I, observation, no nodal recurrence, distant recurrence, brain metastases	4	Isolated brain recurrence	20	20−27	IV	Fossa et al (78) Bokemeyer et al (79)	14	<0.01
		5	Brain and extracranial recurrence	5	5−10	II	RCR guidelines (18)	14	<0.01
4	Seminoma, stage I, observation, no nodal recurrence, distant recurrence, no brain metastases bone metastases	6	−	1	−	I	RCR guidelines (18)	15	<0.01
7	Seminoma, stage II, non-bulky disease (stage IIA/IIB)	9	−	15	15−25	IV	NCCN guidelines (70) NCI guidelines (71) Canadian consensus guidelines (72) Cancer Care Nova Scotia guidelines (74)	6	0.07

Outcome no (utilisation model)	Clinical scenario (utilisation model)	Outcome no (fractionation model)	Clinical scenario (addition to fractionation model)	No of fractions	Range of no of fractions	Level of evidence	References	Notes	Proportion of all testicular cancer patients
							EAU guidelines (75) ESMO guidelines (76) EGCCCG guidelines (80)		
8	Seminoma, stage II, bulky disease (stage IIC), residual disease post-chemotherapy	10	−	15	15−25	−	−	7	0
9	Seminoma, stage II, bulky disease, no residual disease post-chemotherapy, recurrent disease, brain metastases	11	Isolated brain recurrence	20	20−27	IV	Fossa et al (78) Bokemeyer et al (79)	14	0
		12	Brain and extracranial recurrence	5	5−10	II	RCR guidelines (18)	14	0
10	Seminoma, stage II, bulky disease, no residual disease	13	−	1	−	I	RCR guidelines (18)	15	0

Outcome no (utilisation model)	Clinical scenario (utilisation model)	Outcome no (fractionation model)	Clinical scenario (addition to fractionation model)	No of fractions	Range of no of fractions	Level of evidence	References	Notes	Proportion of all testicular cancer patients
	post-chemotherapy, recurrent disease, no brain metastases, bone metastases								
−	Seminoma, stage III, brain metastases at diagnosis	16	−	20	20−27	IV	EGCCCG guidelines (80) Fossa et al (78) Bokemeyer et al (79)	9, 10	<0.01
−	Seminoma, stage III, no brain metastases at diagnosis, residual disease post-chemotherapy	18	−	15	15−25	−	−	7	0
−	Seminoma, stage III, no brain metastases at diagnosis, no residual disease	19	−	20	20−27	IV	Fossa et al (78) Bokemeyer et al (79)	14	<0.01

Outcome no (utilisation model)	Clinical scenario (utilisation model)	Outcome no (fractionation model)	Clinical scenario (addition to fractionation model)	No of fractions	Range of no of fractions	Level of evidence	References	Notes	Proportion of all testicular cancer patients
	post-chemotherapy, recurrent disease, brain metastases, isolated brain recurrence								
−	Seminoma, stage III, no brain metastases at diagnosis, no residual disease post-chemotherapy, recurrent disease, brain metastases, brain and extracranial recurrence	20	−	5	5−10	II	RCR guidelines (18)	14	<0.01
−	Seminoma, stage III, no brain metastases	21	−	1	−	I	RCR guidelines (18)	15	<0.01

Outcome no (utilisation model)	Clinical scenario (utilisation model)	Outcome no (fractionation model)	Clinical scenario (addition to fractionation model)	No of fractions	Range of no of fractions	Level of evidence	References	Notes	Proportion of all testicular cancer patients
	at diagnosis, no residual disease post-chemotherapy, recurrent disease, no brain metastases, bone metastases								
−	NSGCT and non-germ cell tumour, stage I-II, recurrent disease, brain metastases, isolated brain recurrence	24	−	20	20−27	IV	Fossa et al (78) Bokemeyer et al (79)	14	<0.01
−	NSGCT and non-germ cell tumour, stage I-II, recurrent disease, brain metastases, brain	25	−	5	5−10	II	RCR guidelines (18)	14	<0.01

Outcome no (utilisation model)	Clinical scenario (utilisation model)	Outcome no (fractionation model)	Clinical scenario (addition to fractionation model)	No of fractions	Range of no of fractions	Level of evidence	References	Notes	Proportion of all testicular cancer patients
	and extracranial recurrence								
−	NSGCT and non-germ cell tumour, stage I-II, recurrent disease, no brain metastases, bone metastases	26	−	1	−	I	RCR guidelines (18)	15	<0.01
−	NSGCT and non-germ cell tumour, stage III, brain metastases at diagnosis	29	−	20	20−27	IV	EGCCCG guidelines (80) Fossa et al (78) Bokemeyer et al (79)	9, 10	<0.01
−	NSGCT and non-germ cell tumour, stage III, no brain metastases at	31	−	20	20−27	IV	Fossa et al (78) Bokemeyer et al (79)	14	<0.01

Outcome no (utilisation model)	Clinical scenario (utilisation model)	Outcome no (fractionation model)	Clinical scenario (addition to fractionation model)	No of fractions	Range of no of fractions	Level of evidence	References	Notes	Proportion of all testicular cancer patients
	diagnosis, recurrent disease, brain metastases, isolated brain recurrence								
−	NSGCT and non-germ cell tumour, stage III, no brain metastases at diagnosis, recurrent disease, brain metastases, brain and extracranial recurrence	32	−	5	5−10	II	RCR guidelines (18)	14	<0.01
−	NSGCT and non-germ cell tumour, Stage III, no brain metastases at	33	−	1	−	I	RCR guidelines (18)	15	<0.01

Outcome no (utilisation model)	Clinical scenario (utilisation model)	Outcome no (fractionation model)	Clinical scenario (addition to fractionation model)	No of fractions	Range of no of fractions	Level of evidence	References	Notes	Proportion of all testicular cancer patients
	diagnosis, recurrent disease, no brain metastases, bone metastases								

Proportion of all testicular cancer patients in whom radiotherapy is recommended	**0.29 (29%)**
Proportion of all cancer patients = 0.29 x 0.007 =	**0.002 (0.20%)**
Average number of fractions per testicular cancer patient	**3.3**
Average number of fractions per treatment course = 3.3/0.29 =	**11.4**

Key to abbreviations in testicular cancer decision tree and tables

NCCN – National Comprehensive Cancer Network

NCI – National Cancer Institute

BCCA – BC Cancer Agency

RCR – Royal College of Radiologists

EAU – European Association of Urology

ESMO – European Society of Medical Oncology

EGCCCG – European Germ Cell Cancer Consensus Group

NSGCT – Non-seminomatous germ cell tumour

Table 2. Testicular Cancer. The incidence of attributes used to define number of radiotherapy fractions

Key	Population or subpopulation of interest	Attribute	Proportion of populations with this attribute	Quality of Information	References	Notes
A	All registry cancers	Testicular cancer	0.07	α	AIHW (16)	1
B	Testicular cancer	Seminoma	0.56	β	Toner et al (81)	2
C	Seminoma	Stage I	0.83	β	Toner et al (81)	2
D	Seminoma, stage I	Observation	0.11	β	Toner et al (81)	3
E	Seminoma, stage I, observation, no nodal recurrence, distant recurrence, brain metastases	Isolated brain recurrence	0.71	ε	Fossa et al (78)	14
F	Seminoma	Stage II	0.14	β	Toner et al (81)	2
G	Seminoma, stage IIC, no residual disease post-chemotherapy, recurrent disease, brain metastases	Isolated brain recurrence	0.71	ε	Fossa et al (78)	14
H	Seminoma	Stage III	0.03	β	Toner et al (81)	2
I	Seminoma, stage III	Brain metastases at diagnosis	0.01	ε	International Germ Cell Cancer Collaborative Group	8

Key	Population or subpopulation of interest	Attribute	Proportion of populations with this attribute	Quality of Information	References	Notes
					(82)	
J	Seminoma, stage III, no brain metastases at diagnosis, no residual disease post-chemotherapy	Recurrent disease	0.05	λ	Pooled data- see note 11	11
K	Seminoma, stage III, no brain metastases at diagnosis, no residual disease post-chemotherapy, recurrent disease, brain metastases	Isolated brain recurrence	0.71	ε	Fossa et al (78)	14
L	NSGCT and non-germ cell tumour	Stage I-II	0.81	β	Toner et al (81)	2
M	NSGCT and non-germ cell tumour, stage I-II	Recurrent disease	0.12	ζ	Kelty et al (83)	12
N	NSGCT and non-germ cell tumour, stage I-II, recurrent disease	Brain metastases	0.08	ζ	Motzer et al (84)	13
O	NSGCT and non-germ cell tumour, stage I-II, recurrent disease, brain metastases	Isolated brain recurrence	0.71	ε	Fossa et al (78)	14
P	NSGCT and non-germ cell tumour	Stage III	0.19	β	Toner et al (81)	2

Key	Population or subpopulation of interest	Attribute	Proportion of populations with this attribute	Quality of Information	References	Notes
Q	NSGCT and non-germ cell tumour, stage III	Brain metastases at diagnosis	0.01	ε	International Germ Cell Cancer Collaborative Group (82)	8
R	NSGCT and non-germ cell tumour, stage III, no brain metastases at diagnosis	Recurrent disease	0.12	ζ	Kelty et al (83)	12
S	NSGCT and non-germ cell tumour, stage III, no brain metastases at diagnosis, recurrent disease	Brain metastases	0.08	ζ	Motzer et al (84)	13
T	NSGCT and non-germ cell tumour, stage III, no brain metastases at diagnosis, recurrent disease, brain metastases	Isolated brain recurrence	0.71	ε	Fossa et al (78)	14

Testicular Cancer

The optimal radiotherapy fractionation model for testicular cancer was based on the optimal radiotherapy utilisation model for genitourinary cancer (1, 27).

Treatment Guidelines

The following clinical practice guidelines for the management of testicular cancer were identified:

- NCCN clinical practice guidelines on testicular cancer (version 1.2011) (70)
- NCI PDQ guidelines on testicular cancer (2010) (71)
- BC Cancer Agency genitourinary cancer management guidelines (testis) (2005) (73)
- Canadian consensus guidelines for the management of testicular germ cell cancer (72)
- Cancer Care Ontario guidelines on management of stage I seminoma (2010) (85)
- Cancer Care Ontario guidelines on surveillance programs for early stage non-seminomatous testicular cancer (2001)
- Cancer Care Nova Scotia guidelines for the management of adult testicular cancer (2005) (74)
- RCR radiotherapy dose-fractionation guidelines (2006) (18)
- European Association of Urology (EAU) guidelines on testicular cancer (2009) (75)
- European Society of Medical Oncology (ESMO) clinical practice guidelines for diagnosis, treatment and follow-up of testicular seminoma (2010) (76)
- ESMO clinical practice guidelines for diagnosis, treatment and follow-up of testicular non-seminoma (2010) (86)
- European Germ Cell Cancer Consensus Group (EGCCCG) consensus report on diagnosis and treatment of germ cell cancer: Part I (2008) (77)
- EGCCCG consensus report on diagnosis and treatment of germ cell cancer: Part II (2008) (80)

- EGCCCG consensus report on diagnosis and treatment of germ cell cancer (2004) (87)
- German Testicular Cancer Study Group (GTCSG) interdisciplinary consensus on diagnosis and treatment of testicular germ cell tumours (2001) (88)

Explanatory Notes for Tables 1 and 2

1. Incidence of testicular cancer

Testicular cancer constituted 0.7% of all cancers occurring in Australia in 2005 (16).

2. Stage data

Several staging systems have been used for testicular cancer at different institutions. Most systems have in common the division into three stages, with stage I being tumour limited to the testis, stage II metastases to subdiaphragmatic lymph nodes and stage III involvement of supradiaphragmatic lymph nodes or distant or extranodal metastases (89). The Royal Marsden Hospital system subdivides stage III disease into stage III (supradiaphragmatic lymph node metastases) and stage IV (extralymphatic spread). The AJCC/TNM staging system (90), a three-stage system, is the most commonly used staging system in Australia. This system was used in this model. The optimal radiotherapy utilisation model for testicular cancer constructed by Delaney et al (1, 27) was based on the four-stage system and was modified accordingly for the purposes of this model.

Toner et al (81) reported on the patterns of care of testicular cancer in Victoria, Australia, from 1988 to 1993. There were 633 patients identified through the Victorian Cancer Registry. Fifty-six percent of patients had seminoma and 44% had non-seminomatous germ cell tumour (NSGCT) and non-germ cell tumour. Of those with seminoma, 83% had stage I disease, 14% had stage II disease and 3% had stage III disease. Of patients with NSGCT and non-germ cell

tumour, 58% had stage I disease, 23% had stage II disease and 19% had stage III disease.

3. Stage I seminoma: management controversies

In the optimal radiotherapy utilisation model (1, 27), patients were recommended to have adjuvant radiotherapy or to undergo observation after surgery, based on recommendations of guidelines available at the time. In recent years, there has been an increasing role of adjuvant chemotherapy after orchidectomy. Opinions in the guidelines differ regarding the optimal treatment post-surgery.

The NCI guidelines on testicular cancer (71) and NCCN guidelines on testicular cancer (70) recommend surveillance, adjuvant chemotherapy and adjuvant radiotherapy as standard options after orchidectomy. The recommendation of adjuvant chemotherapy is based on the randomised controlled study reported by Oliver et al (26) which compared a single dose of carboplatin with radiotherapy post-orchidectomy. With a median follow-up of 4 years, this study demonstrated non-inferiority of chemotherapy to radiotherapy. There was no statistically significant difference in 3-year relapse-free survival between the two arms (95.9% in the radiotherapy arm and 94.8% in the chemotherapy arm, p=0.32).

The BC Cancer Agency guidelines on genitourinary cancer (73) state that the cure rate in stage I seminoma patients is almost 100% and can be achieved by three strategies: adjuvant radiotherapy, surveillance with administration of radiotherapy or chemotherapy at relapse, and adjuvant chemotherapy with single agent carboplatin. The guidelines comment that adjuvant radiotherapy is the most frequently used adjuvant treatment, and that surveillance and adjuvant chemotherapy are alternatives to radiotherapy. The EAU guidelines on testicular cancer (75) state that adjuvant chemotherapy with carboplatin is an alternative to radiation therapy or surveillance for stage I seminoma. The RCR dose-fractionation guidelines (18) state that early results indicate that adjuvant chemotherapy is as effective as adjuvant radiotherapy.

The Cancer Care Ontario guidelines on management of stage I seminoma (85) state that the optimal management of stage I seminoma remains to be defined, and that patients with stage I seminoma, after orchidectomy, can be managed by either a surveillance strategy or adjuvant radiotherapy or chemotherapy. The guidelines comment that surveillance seems to be the preferable option, as this strategy minimises the toxicity that might be associated with adjuvant treatment, while preserving high long-term cure rates. Similarly, the Canadian consensus guidelines (72) and ESMO guidelines (76) favour active surveillance over adjuvant radiotherapy or chemotherapy. The EGCCCG guidelines (77), updated in 2008 from the original guidelines published in 2004 (87), state that all three treatment options of surveillance, adjuvant chemotherapy and adjuvant radiotherapy are acceptable strategies for the management of patients with stage I seminoma, and comment that a surveillance strategy should be used as the preferred treatment option in patients in whom this approach is considered feasible.

The Cancer Care Nova Scotia guidelines for the management of adult testicular cancer (74) have included only radiotherapy and surveillance as treatment options.

In view of the recommendations in the vast majority of the clinical guidelines, chemotherapy was included as a treatment option after orchidectomy in this model. Therefore, in the model, patients with stage I seminoma were divided into three branches:

i. radiotherapy
ii. chemotherapy
iii. surveillance

In the optimal radiotherapy utilisation model (1, 27), 11% of patients with stage I seminoma were designated undergoing observation, based on the Victorian Patterns of Care study (81) where 33 of the 295 patients with stage I seminoma (11%) chose observation over radiotherapy. This patterns of care study was conducted during the time when adjuvant chemotherapy was not a standard

treatment option. The same proportion (11%) was used in this model for the branch of surveillance. For patients having active treament post-orchidectomy (89% of stage I seminoma patients), half of the patients (44.5%) were assumed to have radiotherapy and the other half (44.5%) assumed to have chemotherapy. A sensitivity analysis was performed modelling the proportion of patients having radiotherapy from 0% to 89%, and modelling the proportion of patients having chemotherapy from 0% to 89%, to estimate the difference that would occur in fractionation.

4. Stage I seminoma: radiotherapy dose

A range of dose fractionation schedules is recommended in the guidelines, as shown in table 3.

Table 3. Adjuvant radiotherapy in stage I seminoma: radiotherapy dose recommended in the guidelines

Guidelines	Radiotherapy dose
NCCN guidelines (70)	20-25 Gy
NCI guidelines (71)	20-26 Gy
Canadian consensus guidelines (72)	20 Gy
BC Cancer Agency guidelines (73)	20-25 Gy
Cancer Care Nova Scotia guidelines (74)	25 Gy in 15-20 fractions
RCR guidelines (18)	20 Gy in 10 fractions (based on a higher level of evidence) 20 Gy in 8 fractions
EAU guidelines (75)	20 Gy
ESMO guidelines (76)	20 Gy in 10 fractions
EGCCCG guidelines (77)	20 Gy in 10 fractions

The guidelines make reference to the randomised controlled study reported by Jones et al (91). In this MRC study, 625 patients with stage I seminoma were randomised to receive radiotherapy 20 Gy in 10 fractions or 30 Gy in 15

fractions. This study showed that 20 Gy in 10 fractions was clinically equivalent to 30 Gy in 15 fractions in both relapse-free survival and overall survival. This study was powered to exclude absolute differences in 2-year relapse rates of 3% to 4% and the authors concluded that treatment with 20 Gy in 10 fractions was unlikely to produce relapse rates more than 3% higher than for the standard 30 Gy in 15 fractions schedule.

Based on evidence from this large randomised controlled study, the dose fractionation schedule, 20 Gy in 10 fractions, was used in this model. A sensitivity analysis was performed to assess the impact of the range of number of fractions (8 to 20 fractions) on the average number of fractions per testicular cancer patient.

5. Stage I seminoma: nodal recurrence after initial surveillance

The BC Cancer Agency guidelines (73) state that para-aortic nodal recurrences on surveillance are managed as for stage II patients. The Cancer Care Nova Scotia guidelines (74) recommend radiotherapy to the para-aortic region and ipsilateral pelvis, with a boost to the involved nodes. No specific dose fractionation schedules are recommended in the guidelines.

The same dose fractionation schedule as used in the model for stage IIA/B seminoma, 30 Gy in 15 fractions, was used. A sensitivity analysis was performed to assess the impact of the range of number of fractions (15 to 25 fractions) on the average number of fractions per testicular cancer patient (see note 6).

6. Stage IIA/B seminoma: radiotherapy dose

A range of dose fractionation schedules is recommended in the guidelines, as shown in table 4.

Table 4. Adjuvant radiotherapy in stage IIA/B seminoma: radiotherapy dose recommended in the guidelines

Guidelines	Radiotherapy dose
NCCN guidelines (70)	35-40 Gy
NCI guidelines (71)	30-36 Gy
Canadian consensus guidelines (72)	30-35 Gy (stage IIA)
Cancer Care Nova Scotia guidelines (74)	35 Gy in 25 fractions
EAU guidelines (75)	30 Gy (stage IIA) 36 Gy (stage IIB)
ESMO guidelines (76)	30 Gy in 15 fractions (stage IIA) 36 Gy in 18 fractions (stage IIB)
EGCCCG guidelines (80)	30 Gy in 15 fractions (stage IIA) 36 Gy in 18 fractions (stage IIB)

No randomised controlled studies exist as to the optimal radiotherapy dose for stage IIA/B seminoma. Different dose fractionation schedules have been used in non-randomised studies. For example, Classen et al (92) reported on a prospective multicentre trial of 87 patients recruited from 30 centres in Germany with stage IIA/B seminoma. Patients with stage IIA disease received a dose of 30 Gy in 15 fractions and those with stage IIB disease received 36 Gy in 18 fractions. The 5-year relapse-free rate was 89%. Chung et al (93) reported on a retrospective study of 126 patients with stage II seminoma treated at the Princess Margaret Hospital, Canada, from 1981 to 1999. Of these, 79 patients with stage IIA/B disease were treated with radiotherapy. The majority received a dose of 25 Gy in 20 fractions or 35 Gy in 25 to 28 fractions. The 5-year relapse-free rate was 91.7% for stage IIA disease and 89.7% for stage IIB disease.

In this model, the dose fractionation schedule, 30 Gy in 15 fractions, was used for patients with stage IIA/B seminoma. A sensitivity analysis was performed to assess the impact of the range of number of fractions (15 to 25 fractions), as recommended in the guidelines, on the average number of fractions per testicular cancer patient.

7. Stage IIC/III seminoma: radiotherapy dose for residual disease after chemotherapy

No specific dose fractionation schedules are recommended in the guidelines. The same dose fractionation schedule as used in the model for stage IIA/B seminoma, 30 Gy in 15 fractions, was used. A sensitivity analysis was performed to assess the impact of the range of number of fractions (15 to 25 fractions) on the average number of fractions per testicular cancer patient (see note 6).

8. Stage III seminoma/NSGCT and non-germ cell tumour: proportion of patients with brain metastases at diagnosis

The International Germ Cell Cancer Collaborative Group (IGCCCG) reported on a study of 5862 patients from 10 countries with metastatic germ cell cancers who were treated on chemotherapy protocols (82). Of the 660 patients with seminoma, 1% had brain metastases at diagnosis. Of the 5202 patients with NSGCT, 1% had brain metastases at diagnosis. These data were used in this model to determine the proportion of patients with brain metastases at diagnosis.

9. Brain metastases at diagnosis: role of radiotherapy

The Canadian consensus guidelines (72) state that patients who present with brain metastases at initial diagnosis have a survival probability in the range of 30%, and that the optimal sequence of chemotherapy, radiotherapy and surgery for patients with brain metastases is not known and management should be individualised. The guidelines state that the role of radiotherapy to the brain is unclear, and that in a multivariate analysis, radiotherapy together with chemotherapy improved the overall prognosis of patients who present with brain metastases versus either treatment alone (94), which is different from results from another study which showed no benefit from the addition of radiotherapy (78).

Similarly, the EGCCCG guidelines (80) state that the optimal sequence of chemotherapy, radiotherapy and surgery is not defined, making reference to the same two studies above which showed contrasting results of radiotherapy. The guidelines state that the role of brain irradiation has not yet been defined in patients in complete remission post-chemotherapy.

The NCCN guidelines (70) recommend chemotherapy and radiotherapy, with or without surgery, for patients with brain metastases from NSGCT. The other clinical guidelines have not made recommendations regarding the role of radiotherapy in these patients.

In this model, patients with brain metastases at diagnosis were recommended to have radiotherapy. In view of the uncertainty of the benefit of radiotherapy as discussed in the clinical guidelines, the alternative view that patients should not be treated with radiotherapy was factored into the model by changing the proportion of patients having radiotherapy from 100% to 0% in the sensitivity analysis (i.e. no patients would have radiotherapy).

10. Brain metastases at diagnosis: radiotherapy dose

The EGCCCG guidelines (80) state that radiotherapy is commonly delivered to the whole brain, to a total dose of 40 to 45 Gy in 2 Gy per fraction, followed by a boost to the region of the metastasis. No specific dose fractionation schedules for the boost are recommended in these guidelines.

In the multi-institutional study reported by Fossa et al (78), 56 of the 139 patients with brain metastases from malignant germ cell tumours had brain metastases at diagnosis. Thirty-six patients (64%) received radiotherapy to the brain. The majority of patients (94%) received whole brain radiotherapy (median dose 40 Gy in 20 fractions). Ten of these patients received a boost to the dominating brain lesion (median dose 14 Gy in 7 fractions, total median dose 54 Gy in 27 fractions). For the entire group of 56 patients who had brain metastases at diagnosis, the cause specific 5-year survival rate was 45%.

In another study reported by Bokemeyer et al (79) on 44 patients with brain metastases from testicular cancer, 42 patients (95%) had NSGCT and 2 patients (5%) had seminoma. Eighteen patients presented with brain metastases at diagnosis. On univariate analysis, patients who received combined chemotherapy and radiotherapy had a significantly improved outcome. In this study, radiotherapy was given as whole brain radiotherapy of 30 to 40 Gy and in some cases combined with a boost of 10 Gy to single lesions (total 40 to 50 Gy).

In this model, the dose fractionation schedule, 40 Gy in 20 fractions, was used for patients with brain metastases at diagnosis as recommended in the EGCCCG guidelines (80). A sensitivity analysis was performed to assess the impact of the range of number of fractions (20 to 27 fractions) on the average number of fractions per testicular cancer patient.

11. Stage III seminoma: proportion of patients who develop recurrence following initial complete response to chemotherapy

It was difficult to determine the proportion of patients with stage III seminoma who relapse after a complete response to chemotherapy. Most studies had very small patient numbers. Pizzocaro et al (95) reported on 31 patients with advanced seminoma treated with cisplatin combination chemotherapy. Of these, 11 patients had stage III disease. Eight patients had a complete response, and 7 of them remained disease-free (relapse rate 12.5%). Schmoll et al (96) reported on 42 patients with advanced seminoma treated with carboplatin chemotherapy. Of the 15 patients with stage III disease, 9 patients had a complete response. None of the patients relapsed. Howard et al (97) reported on 703 patients with testicular cancer treated at the Edinburgh Cancer Centre, Edinburgh, between 1988 and 2002. Ten patients had stage III seminoma, 9 of whom received chemotherapy. Five patients achieved a complete response, with none of them relapsed.

Table 5 shows the numbers of patients, the crude rates of recurrence and the average value for the overall recurrence rate of stage III seminoma patients after a complete response to chemotherapy.

Table 5. Stage III seminoma: relapse rate after complete response to chemotherapy from selected series

Study	Number of patients	Number of recurrences	Relapse rate
Pizzocaro et al (95)	8	1	12.5%
Schmoll et al (96)	9	0	0%
Howard (97)	5	0	0%
Total	22	1	4.5%

12. Stage I-III NSGCT/non-germ cell tumour: proportion of patients who develop recurrence

Kelty et al (83) reported on their 15-year experience of 215 patients with testicular cancer treated at the National Naval Medical Centre in Bethesda, USA. Of these, 122 patients had stage I-III NSGCT. Stage I patients were treated with retroperitoneal lymph node dissection (RPLND). Stage II-III patients were treated with chemotherapy +/- RPLND for resection of residual tumour. Fifteen patients (12%) developed recurrent disease.

13. Stage I-III NSGCT/non-germ cell tumour: proportion of patients who develop brain metastases

Motzer et al (84) reported on 124 patients with advanced germ cell tumour treated at Memorial Sloan Kettering Hospital from 1979 to 1989. These patients had failed to achieve a durable complete response with platin-based chemotherapy. Ninety-four patients were treated with salvage chemotherapy. At salvage, 8 patients (8%) had brain metastases.

14. Relapse with brain metastases: radiotherapy dose

The BC Cancer Agency guidelines (73) state that patients in whom brain metastases are discovered after an otherwise complete systemic response to chemotherapy should have resectable lesions removed and proceed with cranial irradiation thereafter. No specific dose fractionation schedules are recommended in these guidelines. The Canadian consensus guidelines (72) comment that amongst patients with brain metastases at diagnosis in the presence of other systemic disease, patients who relapse with isolated brain metastases and those who relapse with brain metastases and other systemic disease, patients who relapse with isolated brain metastases have the best outcome, making reference to the studies reported by Fossa et al (78) and Bokemeyer et al (79). No specific dose fractionation schedules are recommended in the guidelines for patients with isolated brain metastases at relapse. As discussed above, in the study reported by Fossa et al (78), the majority of patients received whole brain radiotherapy to a median dose of 40 Gy in 20 fractions, with or without a boost (median dose 14 Gy in 7 fractions, total median dose 54 Gy in 27 fractions) (see note 10). In the study reported by Bokemeyer et al (79), patients were treated with whole brain radiotherapy to a dose of 30 to 40 Gy and in some cases combined with a boost of 10 Gy (total 40 to 50 Gy) (see note 10).

The EGCCCG guidelines (80) state that patients who develop metastases in the presence of extra-cranial disease have a 5-year survival rate of 2 to 5%. The BC Cancer Agency guidelines (73) also comment that patients who relapse with brain metastases in the presence of other systemic disease have a poor prognosis, and recommend palliative cranial irradiation. No specific dose fractionation schedules are recommended in the guidelines.

In this model, patients who relapse with brain metastases were divided into two branches: those with isolated brain recurrence and those with brain and extracranial systemic recurrence. In the study reported by Fossa et al (78), of the 83 patients who developed brain metastases after chemotherapy, 59 patients (71%) had isolated brain recurrence and 24 patients (29%) had brain

and extracranial recurrence. These data were used in the model to divide this group of patients.

In the model, patients with isolated brain recurrence were treated with radical intent. No dose fractionation schedules are recommended in the guidelines. The dose fractionation schedule used for patients with brain metastases at diagnosis, 40 Gy in 20 fractions, was used for these patients. A sensitivity analysis was performed to assess the impact of the range of number of fractions (20 to 27 fractions) on the average number of fractions per testicular cancer patient (see note 10).

Patients with brain and extracranial systemic recurrence were treated with palliative intent. The dose fractionation schedule, 20 Gy in 5 fractions, was used in this model. A sensitivity analysis was performed to assess the impact of the range of number of fractions (5 to 10 fractions) on the average number of fractions per testicular cancer patient (see chapter 18).

15. Bone metastases

A single fraction of 8 Gy was used in this model. A sensitivity analysis was performed to assess the impact of the range of number of fractions (1 to 5 fractions) on the average number of fractions per testicular cancer patient (see chapter 18).

Sensitivity Analysis

The optimal number of fractions per testicular cancer patient was 3.3.

The main uncertainty in the management of testicular cancer relates to the choice of adjuvant treatment after radical orchidectomy for stage I seminoma. To model this uncertainty and the impact on the overall optimal average number of fractions for testicular cancer, three scenarios were used. In all scenarios, 11% of patients were designated having observation. In the first scenario, half of the patients who did not undergo observation were recommended having

radiotherapy (44.5% of stage I seminoma patients) and the other half (44.5%) recommended having chemotherapy. In the second scenario, all patients who did not undergo observation were recommended having radiotherapy (89% of stage I seminoma patients) and no patients (0%) were recommended having chemotherapy. In the last scenario, all patients who did not undergo observation were recommended having chemotherapy (89% of stage I seminoma patients) and no patients (0%) were recommended having radiotherapy. There was also uncertainty regarding the role of radiotherapy in patients with brain metastases at diagnosis.

As discussed by Delaney et al (1, 27), there were several data elements where there was uncertainty because of different proportions reported in the literature. These included the proportion of patients with stage IIC seminoma with residual disease after chemotherapy (0 to 0.07) and patients with stage III seminoma with residual disease after chemotherapy (0.0 to 0.15).

There was also a range of number of fractions considered appropriate for stage I seminoma post-surgery (8 to 20 fractions), stage I seminoma nodal recurrence (15 to 25 fractions), stage IIA/B seminoma (15 to 25 fractions), stage IIC seminoma with residual disease after chemotherapy (15 to 25 fractions), stage III seminoma with residual disease after chemotherapy (15 to 25 fractions), brain metastases at diagnosis (20 to 27 fractions), isolated brain recurrence (20 to 27 fractions), brain recurrence with extracranial disease (5 to 10 fractions), and bone metastases (1 to 5 fractions).

To assess the impact of these uncertainties on the average number of radiotherapy fractions in testicular cancer patients, a one-way sensitivity analysis was performed for each of these variables. The impact of these variables on the average number of radiotherapy fractions is illustrated by a tornado diagram (Fig. 1). The average number of radiotherapy fractions per testicular cancer patient varied between 1.2 and 5.4. The optimal fractionation tree for testicular cancer is shown in Figs. 2-5.

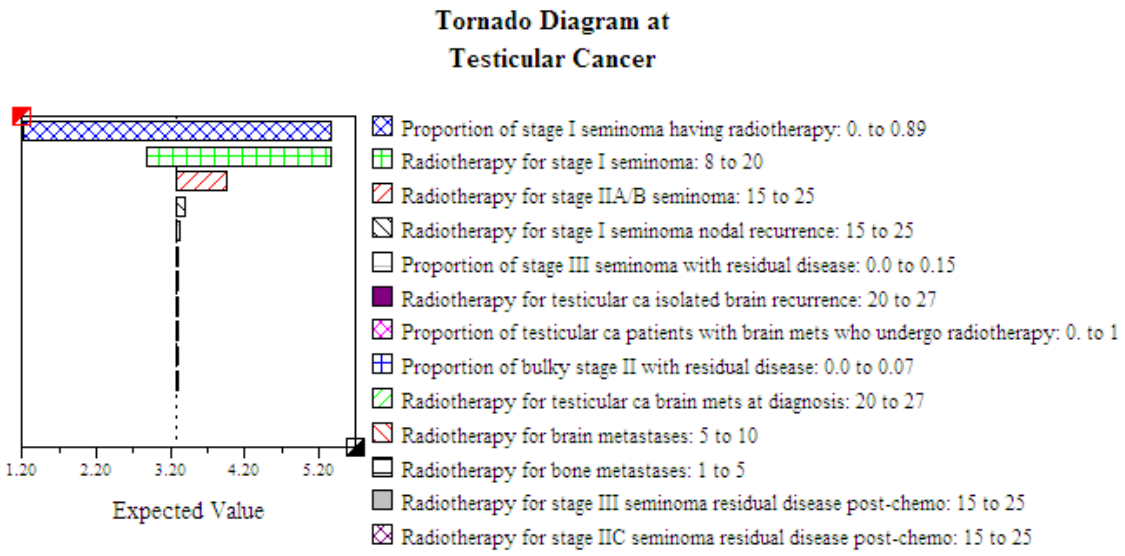

Figure 1. Testicular cancer. Sensitivity analysis

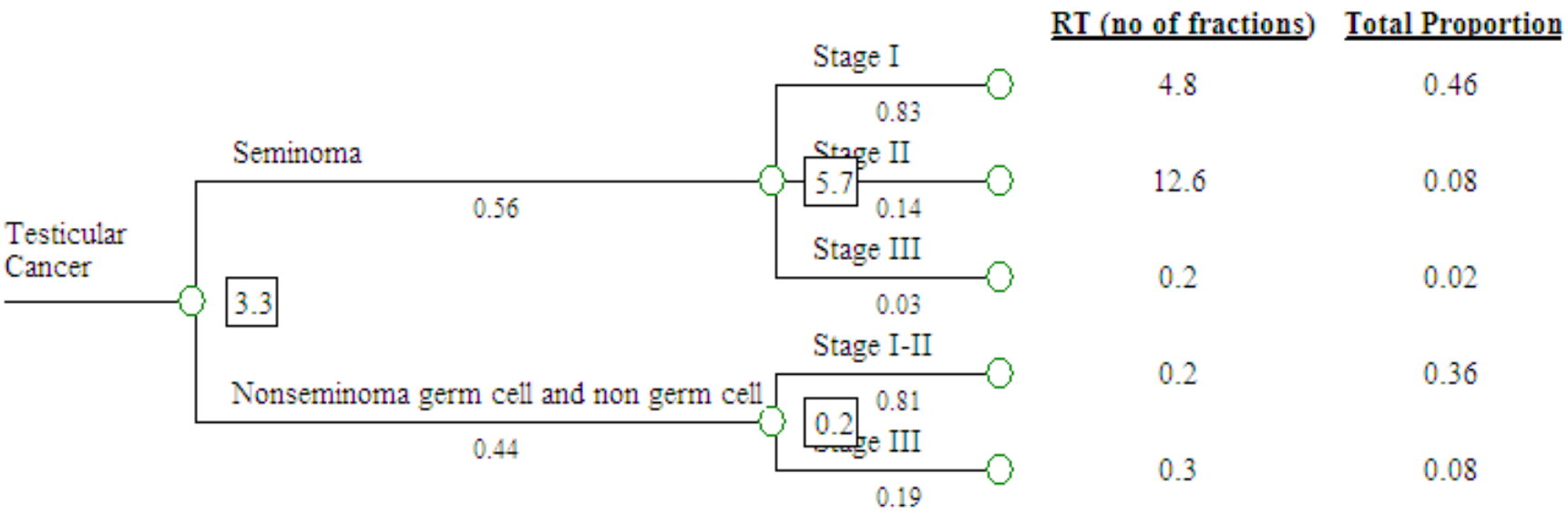

Figure 2. Testicular cancer. Optimal fractionation tree

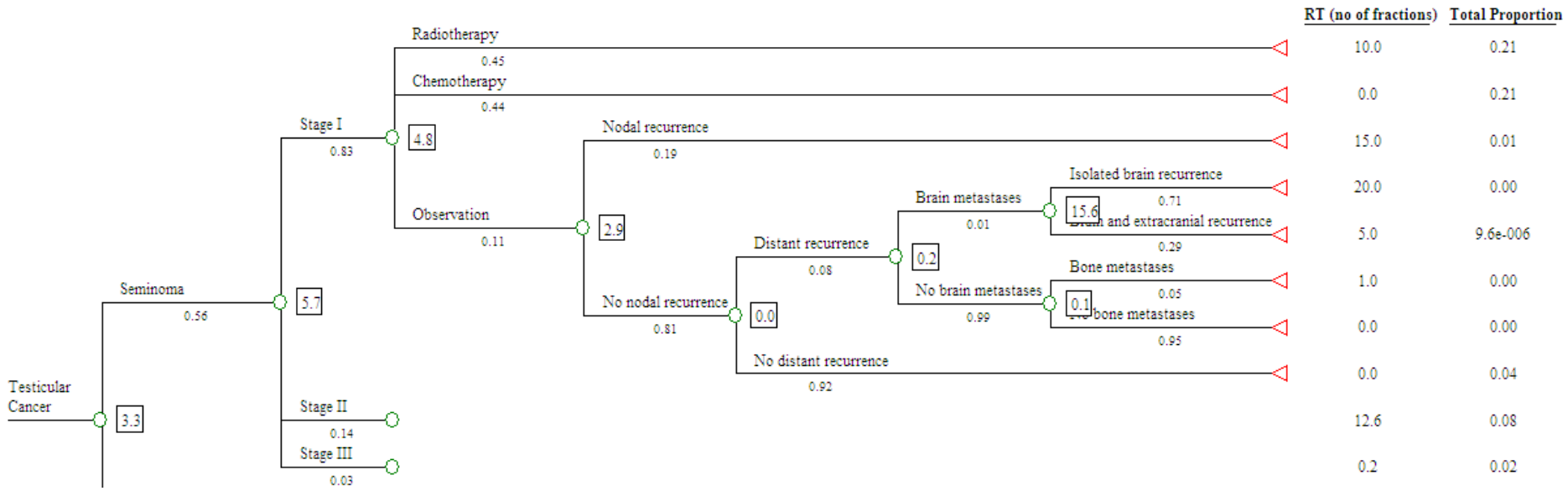

Figure 3. Stage I seminoma. Optimal fractionation tree

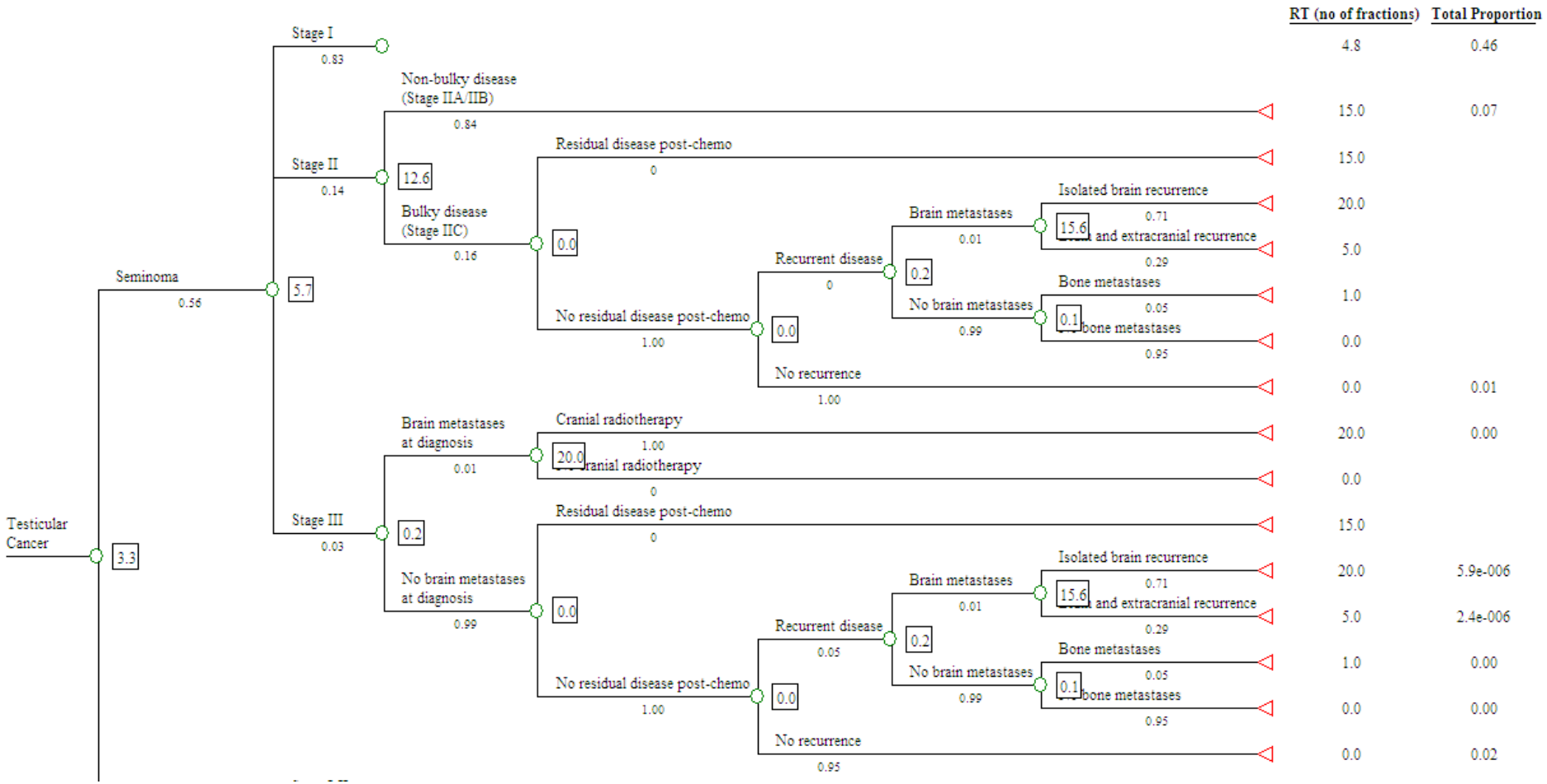

Figure 4. Stage II-III seminoma. Optimal fractionation tree

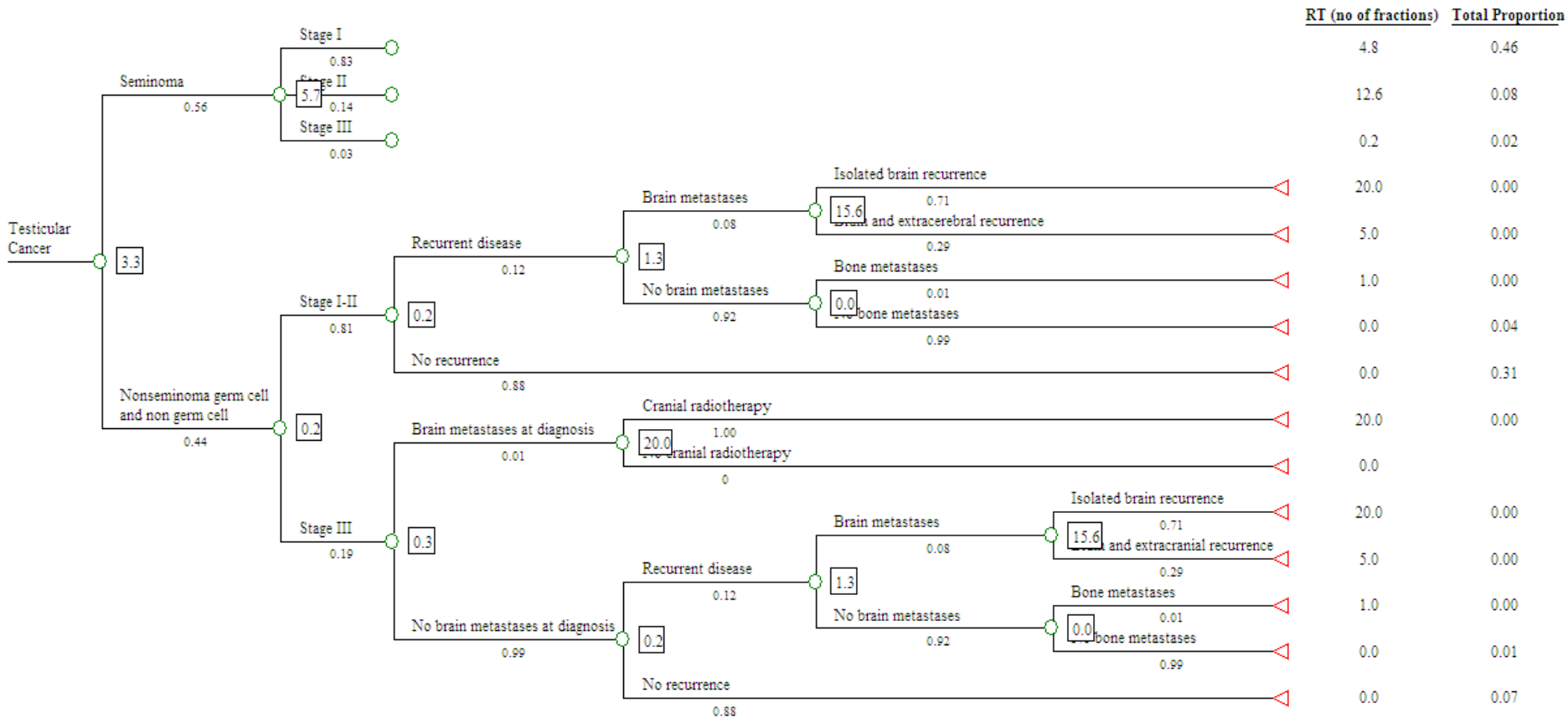

Figure 5. NSGCT/non-germ cell tumour. Optimal fractionation tree

Chapter 4 Gastrointestinal Cancer

4.1 Colon Cancer

Table 1. Colon Cancer. Number of fractions of radiotherapy - Sources of evidence

Outcome no (utilisation model)	Clinical scenario (utilisation model)	Outcome no (fractionation model)	Clinical scenario (addition to fractionation model)	No of fractions	Range of no of fractions	Level of evidence	References	Notes	Proportion of all colon cancer patients
1	Stage T1-3NxM0, bone metastases	1	–	1	–	I	RCR guidelines (18)	2	0.03
2	Stage T1-3NxM0, no bone metastases, brain metastases	2	–	5	5-10	II	RCR guidelines (18)	3	0.01
4	Stage T4NxM0	4	–	25	25-28	–	NCCN guidelines (98)	4	0.10
5	Stage TxNxM1, symptomatic unresectable primary disease	5	–	10	–	–	–	5	0
7	Stage TxNxM1, bone metastases	7	–	1	1–5	I	RCR guidelines (18)	2	<0.01
8	Stage TxNxM1, no bone metastases, brain metastases	8	–	5	5-10	II	RCR guidelines (18)	3	<0.01

Proportion of colon cancer patients in whom radiotherapy is recommended	**0.14 (14%)**
Proportion of all cancer patients = 0.14 x 0.09 =	**0.012 (1.2%)**
Average number of fractions per colon cancer patient	**2.5**
Average number of fractions per treatment course = 2.5/0.14	**17.9**

Key to abbreviations in colon cancer decision tree and table

RCR – Royal College of Radiologists

NCCN – National Comprehensive Cancer Network

Table 2. Colon Cancer. The incidence of attributes used to define number of radiotherapy fractions

Key	Population or subpopulation of interest	Attribute	Proportion of populations with this attribute	Quality of Information	References	Notes
A	All registry cancers	Colon cancer	0.09	α	AIHW (16)	1

Colon Cancer

The optimal radiotherapy fractionation model for colon cancer was based on the optimal radiotherapy utilisation model for gastrointestinal cancer (1, 99).

Treatment Guidelines

The following clinical practice guidelines for the management of colon cancer were identified:

- NHMRC guidelines for the prevention, early detection and management of colorectal cancer (2005) (100)
- NCCN clinical practice guidelines on colon cancer (version 2.2011) (98)
- NCI PDQ guidelines on colon cancer (2010) (101)
- BC Cancer Agency gastrointestinal cancer management guidelines (colon) (2005) (102)
- SIGN Scottish national clinical guideline for the management of colorectal cancer (2003) (103)
- The Royal College of Surgeons of England guidelines for the management of colorectal cancer (2007) (104)
- The RCR radiotherapy dose-fractionation guidelines (2006) (18)

Explanatory Notes for Tables 1 and 2

1. Incidence of colon cancer

Colon cancer constituted 8.5% of all cancers occurring in Australia in 2005 (16).

2. Radiotherapy for bone metastases

A single fraction of 8 Gy was used in this model. A sensitivity analysis was performed to assess the impact of the range of number of fractions (1 to 5

fractions) on the average number of fractions per colon cancer patient (see chapter 18).

3. Radiotherapy for brain metastases

The dose fractionation schedule, 20 Gy in 5 fractions, was used in this model. A sensitivity analysis was conducted to assess the impact of the range of number of fractions (5 to 10 fractions) on the average number of fractions per colon cancer patient (see chapter 18).

4. Radiotherapy for T4NxM0 colon cancer

The NCCN guidelines (98) recommend a dose of 45 to 50 Gy in 25 to 28 fractions, with concurrent chemotherapy, for T4 tumours with penetration to a fixed structure. The dose fractionation schedule, 45 Gy in 25 fractions, was used in the model. A sensitivity analysis was conducted to assess the impact of the range of number of fractions (25 to 28 fractions) on the average number of fractions per colon cancer patient.

5. Radiotherapy for TxNxM1 disease with symptomatic, unresectable primary disease

No guidelines or high level evidence exist as to the optimal palliative dose in this setting. For the purposes of the model, a commonly used dose fractionation schedule, 30 Gy in 10 fractions, was used for these patients.

Sensitivity Analysis

The optimal number of fractions per colon cancer patient was 2.5.

As discussed by Delaney et al (1, 99), there were no data that indicated the proportion of colon cancer patients with tumours which invade into other organs (stages T4NxM0 and TxNxM1 with unresectable primary disease) that might benefit from radiotherapy either as an adjuvant treatment or for palliation. They

performed a sensitivity analysis to examine the effect of varying the proportion that received radiotherapy for these indications (0% to 25% of patients with T4NxM0 colon ca, and 0% to 50% of patients with TxNxM1 colon cancer with symptomatic, unresectable primary disease). The same sensitivity analysis was performed in this model to assess the impact on the average number of fractions per colon cancer patient.

In addition, a range of number of fractions was considered appropriate for T4NxM0 colon cancer (25 to 28 fractions), bone metastases (1 to 5 fractions) and brain metastases (5 to 10 fractions).

To assess the impact of these uncertainties on the average number of radiotherapy fractions in colon cancer patients, a one-way sensitivity analysis was performed for each of these variables. The impact of these variables on the average number of radiotherapy fractions is illustrated by a tornado diagram (Fig. 1). The average number of radiotherapy fractions per colon cancer patient varied between 0.1 and 5.1. This range of number of fractions was due to the uncertainty of the proportion of patients with T4NxM0 colon cancer who would benefit from radiotherapy. The optimal radiotherapy fractionation tree for colon cancer is shown in Fig. 2.

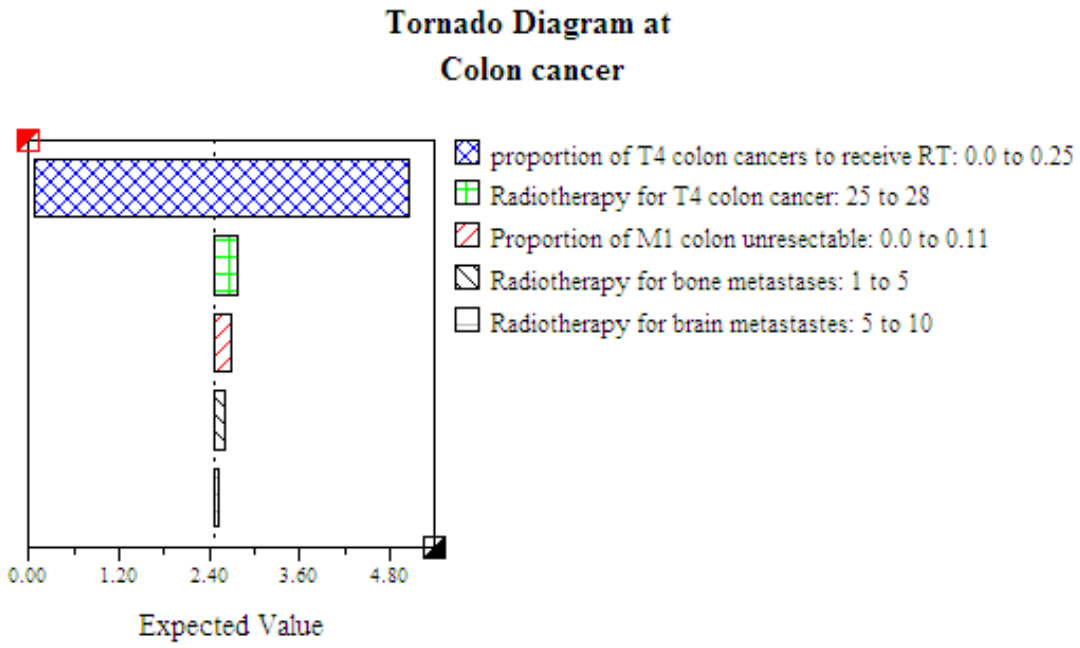

Figure 1. Colon cancer. Sensitivity analysis

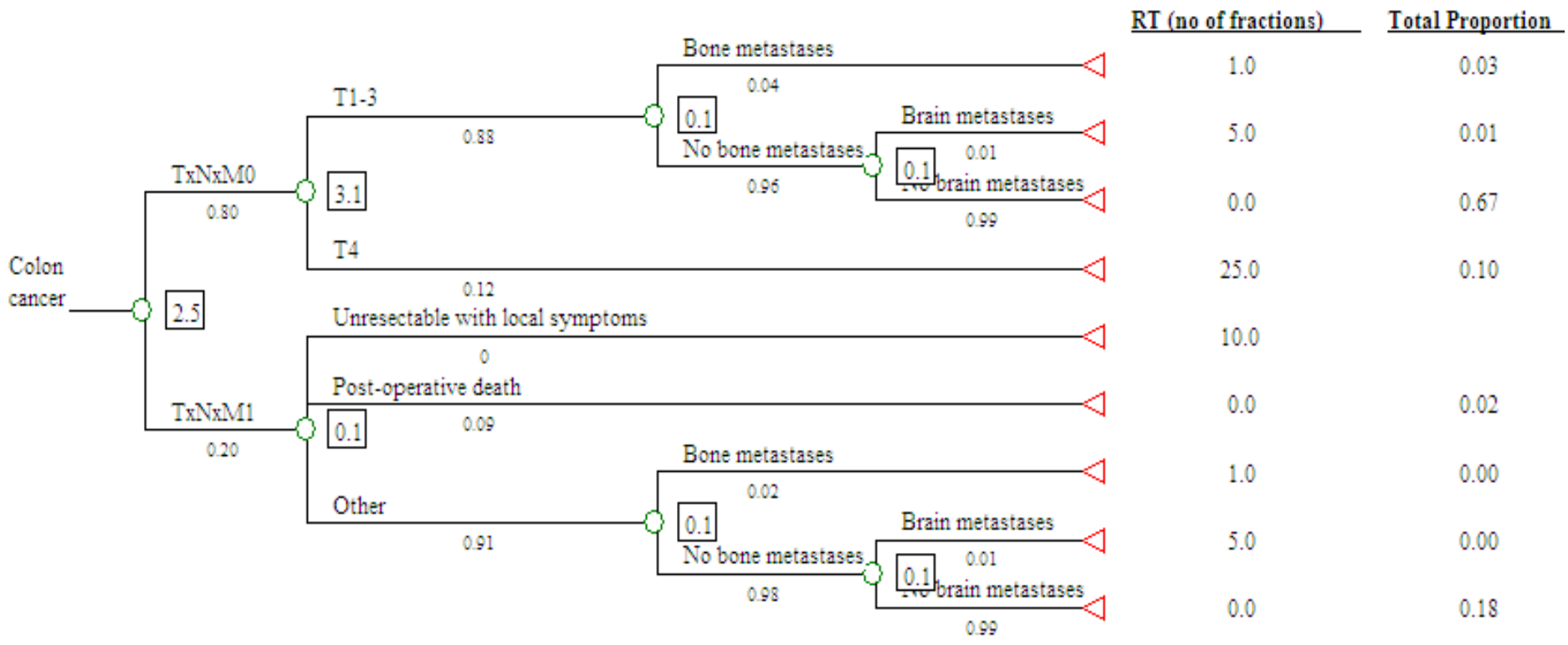

Figure 2. Colon cancer. Optimal fractionation tree

.

4.2 Rectal Cancer

Table 1. Rectal Cancer. Number of fractions of radiotherapy - Sources of evidence

Outcome no (utilisation model)	Clinical scenario (utilisation model)	Outcome no (fractionation model)	Clinical scenario (addition to fractionation model)	No of fractions	Range of no of fractions	Level of evidence	References	Notes	Proportion of all rectal cancer patients
10	Stage T1N0M0, radical surgery, local recurrence	1	Isolated local recurrence, operable	25	25-30	–	–	2	<0.01
		2	Isolated local recurrence, inoperable	28	28-33	–	NHMRC guidelines (100) NCCN guidelines (105)	2	<0.01
		3	Local and distant recurrence	10	10-15	IV	SIGN guidelines (103)	2	<0.01
12	Stage T1N0M0, local excision, favourable pathology, local recurrence	5	Isolated local recurrence, operable	25	25-30	–	–	2	<0.01
		6	Isolated local recurrence, inoperable	28	28-33	–	NHMRC guidelines (100) NCCN guidelines (105)	2	<0.01
		7	Local and distant recurrence	10	10-15	IV	SIGN guidelines (103)	2	<0.01

Outcome no (utilisation model)	Clinical scenario (utilisation model)	Outcome no (fractionation model)	Clinical scenario (addition to fractionation model)	No of fractions	Range of no of fractions	Level of evidence	References	Notes	Proportion of all rectal cancer patients
14	Stage T1N0M0, local excision, unfavourable/ high-risk pathology	9	–	25	25-36	IV	Russell et al (106)	3	<0.01
15	Stage T2N0M0, radical surgery, local recurrence	10	Isolated local recurrence, operable	25	25-30	–	–	2	0.01
		11	Isolated local recurrence, inoperable	28	28-33	–	NHMRC guidelines (100) NCCN guidelines (105)	2	0.01
		12	Local and distant recurrence	10	10-15	IV	SIGN guidelines (103)	2	0.01
17	Stage T2N0M0, local excision	14	–	25	25-36	IV	Russell et al (106)	3	<0.01
18,19	Stage T3-4N0M0 and TxN1-2M0	15	Resectable	5	5-28	II	NHMRC guidelines (100) NCCN guidelines (105) Wong et al (107)	4	0.39

Outcome no (utilisation model)	Clinical scenario (utilisation model)	Outcome no (fractionation model)	Clinical scenario (addition to fractionation model)	No of fractions	Range of no of fractions	Level of evidence	References	Notes	Proportion of all rectal cancer patients
							Royal College of Surgeons guidelines (104) RCR guidelines (18)		
		16	Unresectable	25	25-30	II	NHMRC guidelines (100) NCCN guidelines (105) Wong et al (107) Royal College of Surgeons guidelines (104) RCR guidelines (18)	4	0.13
20	Stage TxNxM1, symptomatic primary	17	–	10	–	–	SIGN guidelines (103)	6	0.03
21	Stage TxNxM1, brain metastases	18	–	5	5-10	II	RCR guidelines (18)	7	<0.01
22	Stage TxNxM1, no brain metastases,	19	–	1	1-5	I	RCR guidelines (18)	8	<0.01

Outcome no (utilisation model)	Clinical scenario (utilisation model)	Outcome no (fractionation model)	Clinical scenario (addition to fractionation model)	No of fractions	Range of no of fractions	Level of evidence	References	Notes	Proportion of all rectal cancer patients
	symptomatic bone metastases								

Proportion of all rectal cancer patients in whom radiotherapy is recommended	**0.59 (59%)**
Proportion of all cancer patients = 0.59 x 0.05 =	**0.0295 (2.95%)**
Average number of fractions per rectal cancer patient	**6.3**
Average number of fractions per treatment course = 6.3/0.59 =	**10.7**

Key to abbreviations in rectal cancer decision tree and tables

NHMRC – National Health and Medical Research Committee

SIGN – Scottish Intercollegiate Guidelines Network

NCCN – National Comprehensive Cancer network

RCR – Royal College of Radiologists

Table 2. Rectal Cancer. The incidence of attributes used to define number of radiotherapy fractions

Key	Population or subpopulation of interest	Attribute	Proportion of populations with this attribute	Quality of Information	References	Notes
A	All registry cancers	Rectal cancer	0.05	α	AIHW (16)	1
B	Stage T1N0M0, radical surgery, local recurrence	Confined to pelvis	0.52	θ	McCall et al (108)	2
C	Stage T1N0M0, radical surgery, local recurrence confined to pelvis	Operable local recurrence	0.48	λ	Garcia-Aguilar et al (109)	2
D	Stage T1N0M0, local excision with favourable pathology, local recurrence	Confined to pelvis	0.52	θ	McCall et al (108)	2
E	Stage T1N0M0, local excision with favourable pathology, local recurrence confined to pelvis	Operable local recurrence	0.82	λ	Paty et al (110)	2
F	Stage T2N0M0, radical surgery, local recurrence	Confined to pelvis	0.52	θ	McCall et al (108)	2
G	Stage T2N0M0, radical surgery,	Operable local	0.48	λ	Garcia-Aguilar et al (109)	2

Key	Population or subpopulation of interest	Attribute	Proportion of populations with this attribute	Quality of Information	References	Notes
	local recurrence confined to pelvis	recurrence				
H	Stage T3/4 or N1-2 M0	Unresectable disease	0.25	α	National Colorectal Cancer Care Survey (111)	5

Rectal Cancer

The optimal radiotherapy fractionation model for rectal cancer was based on the optimal radiotherapy utilisation model for gastrointestinal cancer (1, 99).

Treatment Guidelines

The following clinical practice guidelines for the management of rectal cancer were identified:

- NHMRC guidelines for the prevention, early detection and management of colorectal cancer (2005) (100)
- NCCN clinical practice guidelines on rectal cancer (version 2.2011) (105)
- NCI PDQ guidelines on rectal cancer (2010) (112)
- BC Cancer Agency gastrointestinal cancer management guidelines (rectum) (2005) (113)
- Cancer Care Ontario guidelines on pre-operative or post-operative therapy for stage II or III rectal cancer (2010) (107)
- SIGN Scottish national clinical guideline for the management of colorectal cancer (2003) (103)
- The Royal College of Surgeons of England guidelines for the management of colorectal cancer (2007) (104)
- The RCR radiotherapy dose-fractionation guidelines (2006) (18)

Explanatory Notes for Tables 1 and 2

1. Incidence of rectal cancer

Rectal cancer constituted 4.5% of all cancers occurring in Australia in 2005 (16).

2. Radiotherapy for local recurrence after initial surgery for T1/2N0M0 rectal cancer

Operable isolated local recurrence

The NHMRC guidelines (100) state that there are no randomised, prospective trials to act as guides for the management of locally recurrent rectal cancer. The guidelines state that about 50% of patients with local recurrence have disease confined to the pelvis (108, 114), and that a small number of recurrences may be salvaged with further local treatment. McCall et al (108) reviewed 51 published papers reporting data on 10465 rectal cancer patients and analysed local recurrence rates after surgery alone for rectal cancer. Of these, 22 series reported both total local recurrence rates and isolated local recurrence rates. Fifty-two percent of the patients with local recurrence had isolated local recurrence with no distant disease. In the absence of distant disease or disabling co-morbidities, the NHMRC guidelines (100) recommend that surgical resection should be considered, and preoperative chemoradiotherapy if radiotherapy has not been administered previously.

Most studies on salvage surgery for locally recurrent rectal cancer include patients with synchronous distant recurrence and report a salvage surgical rate of 33 to 51% (115-118). Only a few studies have looked at the rate of salvage surgery in patients with isolated local recurrence. Garcia-Aguilar et al (109) reported a 48% salvage surgical rate in 87 patients with isolated local recurrence after radical surgery. Ogunbiyi et al (119) reported on 44 patients with recurrent rectal cancer after radical surgery, 15 of whom had isolated local recurrence and 7 (47%) underwent salvage surgery. The salvage surgical rate for local recurrence after previous local excision is higher. Paty et al (110) reported on 125 patients with T1 and T2 rectal cancer treated by local excision as definitive surgery. Seventeen patients had isolated local recurrence, 14 of whom (82%) underwent salvage resection.

No specific dose fractionation schedules for pre-operative chemoradiotherapy for local recurrence are recommended in the NHMRC guidelines. For the purposes of the model, the same dose fractionation schedule for pre-operative chemoradiotherapy for locally advanced rectal cancer, 45 Gy in 25 fractions,

was used for these patients. A sensitivity analysis was conducted to assess the impact of the range of number of fractions for these patients (25 to 30 fractions) on the average number of fractions per rectal cancer patient (see note 3).

Inoperable isolated local recurrence

The NHMRC guidelines (100) recommend palliative radiotherapy, with or without chemotherapy, for patients not suitable for salvage surgery for symptom control, if they have not previously received radiotherapy. Patients of good performance status should be considered for chemoradiotherapy. The guidelines have not recommended specific dose fractionation schedules for patients with inoperable local recurrence, but have recommended doses in the order of 50 to 60 Gy for patients with primary unresectable tumours (28 to 33 fractions in 1.8 Gy per fraction). The NCCN guidelines (105) also state that for unresectable rectal cancers, doses higher than 54 Gy may be required. Extrapolating from the NHMRC guidelines recommendation, the dose fractionation schedule, 50.4 Gy in 28 fractions, was used for patients with inoperable isolated local recurrence, to maximise local control and symptom relief. A sensitivity analysis was conducted to assess the impact of the range of number of fractions for these patients (28 to 33 fractions) on the average number of fractions per rectal cancer patient.

This indication does not include patients of poor performance status who may receive a shorter course of palliative radiotherapy, as this number is difficult to obtain and is assumed to be low.

Local recurrence with metastases

No guidelines or high level evidence exist as to the optimal palliative dose in this setting. A systematic review by Wong et al (120) concluded that the optimal dose fractionation schedule for the palliation of pelvic recurrence of rectal cancer remains undefined. The SIGN guidelines (103) state that, for palliation of local symptoms, “a regimen of 30 Gy in 10 to 15 fractions is widely used, but there is no good evidence to support this practice”. For the purposes of this

model, the dose fractionation schedule, 30 Gy in 10 fractions, was used. A sensitivity analysis was performed to assess the impact of the range of number of fractions (10 to 15 fractions) on the average number of fractions per rectal cancer patient.

3. Radiotherapy post local excision of T1N0M0 (with unfavourable/high risk pathology) and T2N0M0 rectal cancer

There are no recommended dose fractionation schedules in the clinical guidelines. In the optimal radiotherapy utilisation model, Delaney et al (1, 99) recommended adjuvant radiotherapy following a treatment rationale based on the RTOG 89-02 study (106). In this study, doses of 50 to 65 Gy in 1.8 to 2 Gy per fraction were used (25 to 36 fractions). The dose fractionation schedule, 50 Gy in 25 fractions, was used in the model. A sensitivity analysis was performed to assess the impact of the range of number of fractions for these patients (25 to 36 fractions) on the average number of fractions per rectal cancer patient.

4. Adjuvant radiotherapy for high risk (T3-4 or N1-2) rectal cancer

The NHMRC guidelines (100) recommend adjuvant pre-operative or post-operative radiotherapy for high risk (T3/4 or N+) rectal cancer, and state that pre-operative radiotherapy may lower the incidence of late morbidity compared to post-operative radiotherapy. The guidelines state that no direct comparison between long-course and short-course pre-operative radiotherapy has been published, and that this question is currently (at the time of publication of the guidelines) being addressed in a Trans Tasman Radiation Oncology Group (TROG)/Australasian Gastrointestinal Trials Group (AGITG) study. The TROG 01.04 study was a randomised trial comparing long-course radiotherapy (50.4 Gy in 28 fractions) and concurrent chemotherapy with short-course radiotherapy alone (25 Gy in 5 fractions) for clinically resectable T3 rectal cancer. This study was closed to accrual in 2006 and results are awaited.

The NCCN guidelines (105) state that combined modality therapy consisting of surgery, radiation therapy and chemotherapy is recommended for the majority

of patients with stage II (T3/4 N0) or stage III (N+) rectal cancer. The guidelines comment that the advantages and disadvantages of pre-operative short-course radiotherapy versus pre-operative long-course chemoradiotherapy have been reviewed, but currently short-course radiotherapy is not widely practised in the USA. The NCI guidelines (112) recommend pre-operative chemoradiotherapy for patients with stage II and III rectal cancer.

The Cancer Care Ontario guidelines on pre-operative or post-operative therapy for stage II or III rectal cancer (107) state that pre-operative chemoradiotherapy (45 to 50.4 Gy in 25 to 28 fractions) is preferred, compared to pre-operative radiotherapy alone (same dose fractionation schedule), to decrease local recurrence. The guidelines also state that pre-operative chemoradiotherapy is preferred to post-operative chemoradiotherapy to decrease local recurrence and adverse effects. For patients with relative contraindications to chemotherapy in the pre-operative period, acceptable alternatives are pre-operative standard fractionation (45 to 50.4 Gy in 25 to 28 fractions) or hypofractionation (25 Gy in 5 fractions) radiotherapy alone followed by surgery, guided by the risk of adverse effects.

The Royal College of Surgeons guidelines (104) recommend that patients with resectable rectal cancer should be considered for pre-operative short course radiotherapy (25 Gy in 5 fractions) with surgery performed within 1 week of completion of radiotherapy. When local staging indicates that concurrent chemoradiotherapy would be appropriate to downstage the tumour, a dose of 45 Gy in 25 fractions, with or without a reduced volume boost dose of 5.4 to 9 Gy in 3 to 5 fractions (total 50.4 to 54 Gy in 28 to 30 fractions), is recommended.

The RCR dose-fractionation guidelines (18) recommend pre-operative over post-operative radiotherapy as the pre-operative treatment is more effective and less toxic. The guidelines state that, when short course pre-operative radiotherapy is indicated, the dose fractionation schedule, 25 Gy in 5 fractions, with surgery within 1 week, is recommended. For selected patients, pre-operative radiotherapy with 45 Gy in 25 fractions, followed by surgery 6 to 10

weeks after, is recommended. A reduced volume boost dose of 5.4 to 9 Gy in 3 to 5 fractions may be used (total 50.4 to 54 Gy in 28 to 30 fractions).

Summarising these guideline recommendations, for the purposes of this model, long-course pre-operative chemoradiotherapy was recommended for patients with clinically unresectable high risk rectal cancer. The dose fractionation schedule, 45 Gy in 25 fractions, was used in the model for these patients. A sensitivity analysis was conducted to assess the impact of the range of number of fractions for these patients (25 to 30 fractions) on the average number of fractions per rectal cancer patient.

For patients with clinically resectable high risk rectal cancer, both short-course radiotherapy (25 Gy in 5 fractions) and long-course chemoradiotherapy (45 to 50.4 Gy in 25 to 28 fractions) are recommended in the guidelines, representing different approaches in the UK (favouring short-course radiotherapy) and North America (favouring long-course radiotherapy). The TROG 01.04 study was closed in 2006 and results are currently awaited. In the model, the shortest dose fractionation schedule, 25 Gy in 5 fractions, was used for patients with resectable high risk rectal cancer. A sensitivity analysis was conducted to assess the impact of the range of number of fractions (5 to 28 fractions) on the average number of fractions per rectal cancer patient.

5. Proportion of patients with high risk rectal cancer who have clinically unresectable disease

The proportion of patients with clinically unresectable rectal cancer was sourced from the Australian National Colorectal Cancer Care Survey (111). Of the 130 patients who received adjuvant radiotherapy for rectal cancer, 32 (25%) received pre-operative radiotherapy for initially unresectable rectal cancer.

6. Radiotherapy for patients with TxNxM1 disease with symptomatic primary disease

No guidelines or high level evidence exist as to the optimal radiotherapy dose in this setting. The NHMRC guidelines (100) state that some of the most difficult decisions on treatment are in patients diagnosed with both local and distant disease, and that their treatment often needs to be individualised. When patients present with a primary colorectal cancer and synchronous liver metastases, the guidelines state that they can still be considered for potentially curative treatment.

This patient group is heterogeneous and a range of radiotherapy dose fractionation schedules, ranging from a short course of radiotherapy for symptom control to a long course of chemoradiotherapy with radical intent, is considered appropriate depending on the individual scenario. As a pragmatic approach, for the purposes of the model, a commonly used palliative regimen, 30 Gy in 10 fractions, was used for these patients in the model.

7. Radiotherapy for brain metastases

The dose fractionation schedule, 20 Gy in 5 fractions, was used in this model. A sensitivity analysis was conducted to assess the impact of the range of number of fractions (5 to 10 fractions) on the average number of fractions per rectal cancer patient (see chapter 18).

8. Radiotherapy for bone metastases

A single fraction of 8 Gy was used in this model. A sensitivity analysis was performed to assess the impact of the range of number of fractions (1 to 5 fractions) on the average number of fractions per rectal cancer patient (see chapter 18).

Sensitivity Analysis

The optimal number of fractions per rectal cancer patient was 6.3.

There was a range of number of fractions considered appropriate for the following branches in the model: radiotherapy for operable isolated local recurrence (25 to 30 fractions), radiotherapy for inoperable isolated local recurrence (28 to 33 fractions), radiotherapy for local recurrence with distant metastases (10 to 15 fractions), radiotherapy post local excision of T1N0M0 (with unfavourable/high risk pathology) and T2N0M0 rectal cancer (25 to 36 fractions), radiotherapy for clinically unresectable high risk rectal cancer (25 to 30 fractions), radiotherapy for resectable high risk rectal cancer (5 to 28 fractions), radiotherapy for brain metastases (5 to 10 fractions) and radiotherapy for bone metastases (1 to 5 fractions).

To assess the impact of these uncertainties on the average number of radiotherapy fractions in rectal cancer patients, a one-way sensitivity analysis was performed for each of these variables. The impact of these variables on the average number of radiotherapy fractions is illustrated by a tornado diagram (Fig.1). The average number of radiotherapy fractions per rectal cancer patient varied between 6.3 and 15.2. This range of number of fractions was due to the large range of number of fractions considered appropriate for pre-operative radiotherapy for patients with resectable high risk rectal cancer (5 to 28 fractions) (see note 4). The currently awaited TROG 01.04 results may significantly affect the optimal number of fractions for rectal cancer patients, if one dose fractionation schedule is shown to be superior to the other. The optimal fractionation tree for rectal cancer is shown in Fig.2.

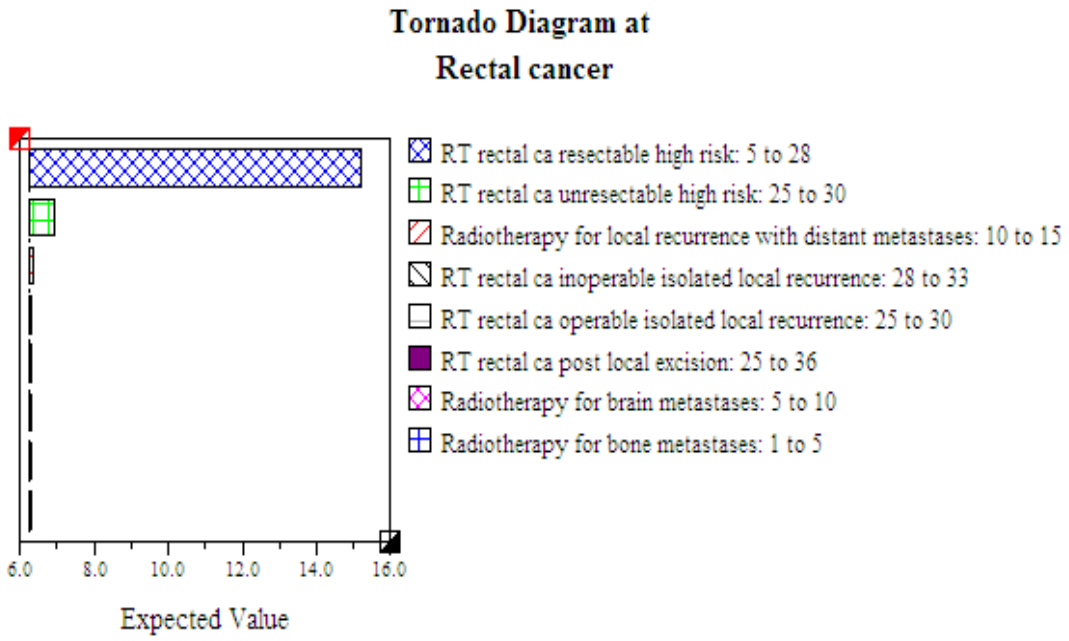

Figure 1. Rectal cancer. Sensitivity analysis

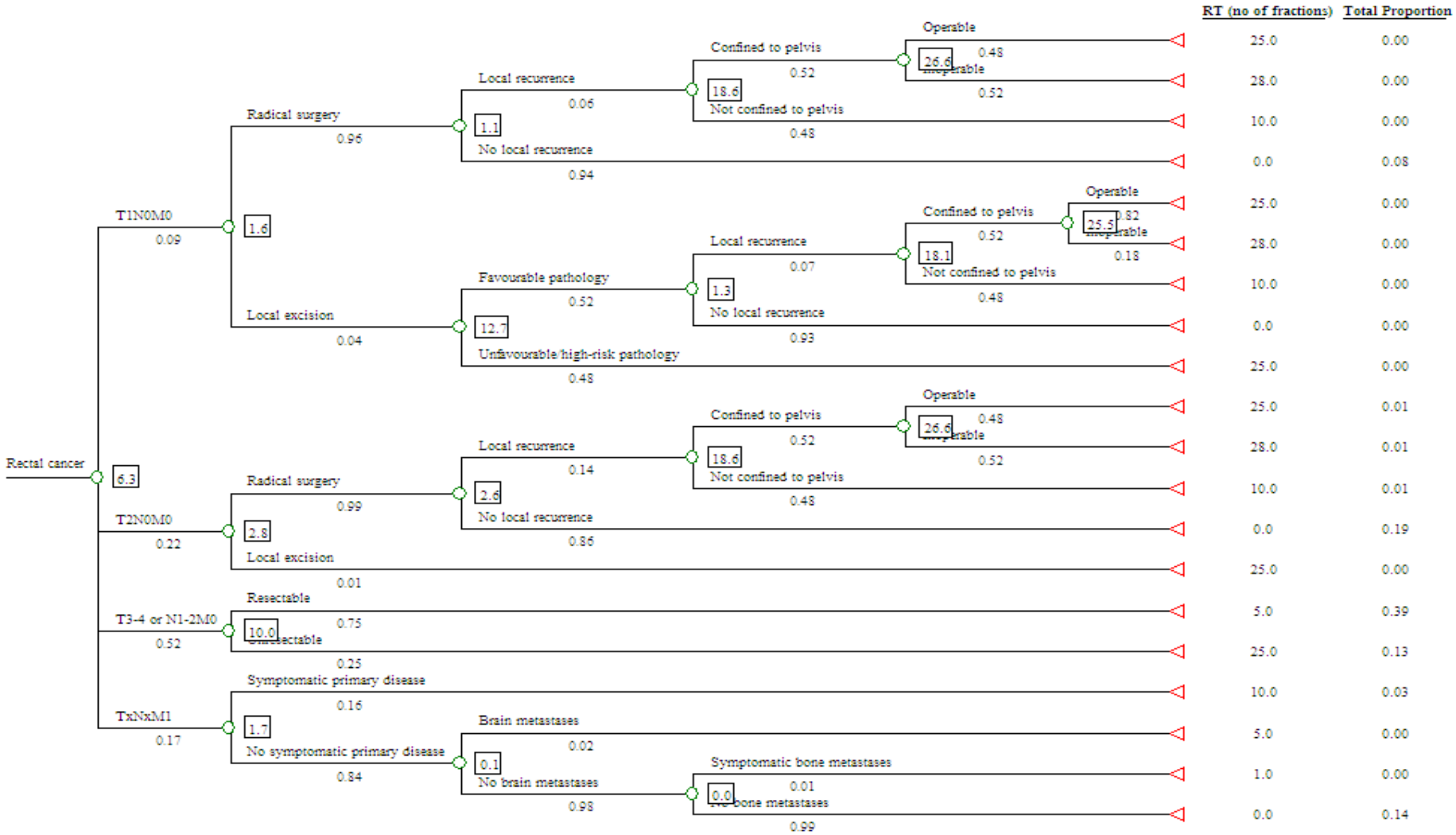

Figure 2. Rectal cancer. Optimal fractionation tree

4.3 Pancreatic Cancer

Table 1. Pancreatic Cancer. Number of fractions of radiotherapy - Sources of evidence

Outcome no (utilisation model)	Clinical scenario (utilisation model)	Outcome no (fractionation model)	Clinical scenario (addition to fractionation model)	No of fractions	Range of no of fractions	Level of evidence	References	Notes	Proportion of all pancreatic cancer patients
2	Pancreatic cancer, localised, operable	1	–	25	25-30	–	NCCN guidelines (121)	2	0
4	Pancreatic cancer, localised, inoperable	3	Medically fit	28	25-33	IV	NCCN guidelines (121)	3,4	0.33
		4	Medically unfit	10	–	–	–	3,4	0.04
5	Pancreatic cancer, metastatic disease, symptomatic primary or metastases	5	–	10	–	–	–	5	0.14

Proportion of all pancreatic cancer patients in whom radiotherapy is recommended	**0.50 (50%)**
Proportion of all cancer patients = 0.50 x 0.02 =	**0.01 (1%)**
Average number of fractions per pancreatic cancer patient	**10.8**
Average number of fractions per treatment course = 10.8/0.50 =	**21.6**

Key to abbreviations in pancreatic cancer decision tree and tables

NCCN – National Comprehensive Cancer network

Table 2. Pancreatic Cancer. The incidence of attributes used to define number of radiotherapy fractions

Key	Population or subpopulation of interest	Attribute	Proportion of populations with this attribute	Quality of Information	References	Notes
A	All registry cancers	Pancreatic cancer	0.02	α	AIHW (16)	1
B	Pancreatic cancer, localised, inoperable	Medically fit	0.90	γ	Krzyzanowska et al (122)	3

Pancreatic Cancer

The optimal radiotherapy fractionation model for pancreatic cancer was based on the optimal radiotherapy utilisation model for gastrointestinal cancer (1, 99).

Treatment Guidelines

The following clinical practice guidelines for the management of pancreatic cancer were identified:

- NCCN clinical practice guidelines on pancreatic adenocarcinoma (version 2.2010) (121)
- NCI PDQ guidelines on pancreatic cancer (2010) (123)
- BC Cancer Agency gastrointestinal cancer management guidelines (pancreas) (2005) (124)
- Cancer Care Ontario guidelines on treatment of locally advanced pancreatic cancer (2010) (125)
- Cancer Care Ontario guidelines on chemotherapy or radiotherapy for resectable pancreatic adenocarcinoma (2007) (126)

Explanatory Notes for Tables 1 and 2

1. Incidence of pancreatic cancer

Pancreatic cancer constituted 2.2% of all cancers occurring in Australia in 2005 (16).

2. Adjuvant radiotherapy after resection of localised pancreatic cancer

In the optimal radiotherapy utilisation model (1, 99), patients were recommended to have adjuvant radiotherapy because the majority of treatment guidelines at the time recommended adjuvant radiotherapy after complete resection for pancreatic cancer. It was acknowledged that the role of adjuvant

radiotherapy was controversial due to conflicting results from studies. In view of the controversy, a sensitivity analysis was performed with no adjuvant radiotherapy as the alternative option.

The role of adjuvant radiotherapy remains controversial. The NCCN guidelines (121) state that no definite standard has been established in the adjuvant treatment of pancreatic cancer and both chemoradiotherapy and chemotherapy alone are options for adjuvant treatment. The guidelines recommend that adjuvant radiotherapy, when given, should be administered at a dose of 45 to 54 Gy in 1.8 to 2 Gy per fraction (25 to 30 fractions).

The NCI guidelines (123) state that the role of post-operative therapy (chemotherapy with or without radiotherapy) remains controversial because of statistically underpowered randomised trials and conflicting trial results (127-131). Both post-operative chemoradiotherapy and chemotherapy alone are listed as treatment options under clinical evaluation in the guidelines.

The Cancer Care Ontario guidelines on chemotherapy or radiotherapy for resectable pancreatic adenocarcinoma (126) recommend post-operative chemotherapy in patients with resectable pancreatic cancer, and state that the role of radiotherapy is unclear and warrants further study.

In the model, based on the currently available clinical guidelines, patients were not recommended adjuvant radiotherapy. A sensitivity analysis was performed with adjuvant radiotherapy as the alternative option to address the controversy of the role of adjuvant radiotherapy in these patients. The dose fractionation schedule, 45 Gy in 25 fractions, was used in the model for patients receiving adjuvant radiotherapy, based on the NCCN guidelines recommendation. A sensitivity analysis was performed to assess the impact of the range of number of fractions (25 to 30 fractions) on the average number of fractions per pancreatic cancer patient.

3. The role of radiotherapy in unresectable localised pancreatic cancer

The NCCN guidelines (121) state that chemoradiotherapy is a conventional management option for unresectable locoregional pancreatic cancer, although the utility of chemoradiotherapy in this setting is controversial. The guidelines recommend chemoradiotherapy as a treatment option for patients with locally advanced unresectable disease with no metastases who have a good performance status. The Cancer Care Ontario guidelines on treatment of locally advanced pancreatic cancer (125) also recommend combined chemotherapy and radiotherapy for medically fit patients.

Park et al (132) reported on the outcome of 340 patients with unresectable pancreatic cancer enrolled from 1998 to 2005 at the Seoul National University Hospital, Korea. Thirty-two patients (9.4%) had performance status of Eastern Cooperative Oncology Group (ECOG) 3-4. In a patterns of care study of patients with locally advanced pancreatic cancer in the USA (122), 10.4% of the 1696 patients had significant co-morbidities with a Charlson co-morbidity score of ≥ 2. In this model, data from this population-based study were used to divide the branch of patients with unresectable localised pancreatic cancer into two branches: those who have few comorbidities and therefore medically fit for concurrent chemoradiotherapy (0.90) and those who are unfit for concurrent chemoradiotherapy (0.10).

4. Radiotherapy dose fractionation schedules for unresectable localised pancreatic cancer

For concurrent chemoradiotherapy, the NCCN guidelines (121) recommend doses of 50 to 60 Gy in 1.8 to 2 Gy per fraction (28 to 33 fractions) with concurrent chemotherapy, based on studies on radiotherapy with concurrent 5-Fluorouracil (133-134). The dose fractionation schedule, 50.4 Gy in 28 fractions, was used in the model for these patients. A sensitivity analysis was performed to assess the impact of the range of number of fractions (28 to 33 fractions) on the average number of fractions per pancreatic cancer patient.

For palliative radiotherapy alone, no guidelines or high level evidence exist as to the optimal dose in this setting. For the purposes of this model, a commonly used palliative regimen, 30 Gy in 10 fractions, was used for these patients.

5. Radiotherapy for patients with metastatic pancreatic cancer with symptomatic primary or metastases

The most common sites of metastases from pancreatic cancer are the lymph nodes, liver, peritoneum and lung. Treatment of metastases with radiotherapy would be very rare. In most instances, palliative radiotherapy is delivered to the primary site for symptom control. No guidelines or high level evidence exist as to the optimal palliative dose in this setting. A commonly used palliative regimen, 30 Gy in 10 fractions, was used for these patients in the model.

Sensitivity Analysis

The optimal number of fractions per pancreatic cancer patient was 10.8.

Because of the uncertainty regarding the role of adjuvant radiotherapy after resection, all patients who undergo resection were recommended not to receive radiotherapy with the alternative of all patients receiving adjuvant radiotherapy being modelled in sensitivity analysis. A range of number of fractions was considered appropriate for these patients (25 to 28 fractions). A range of number of fractions was also considered appropriate for concurrent chemoradiotherapy for unresectable localised pancreatic cancer (28 to 33 fractions).

To assess the impact of these uncertainties on the average number of radiotherapy fractions in pancreatic cancer patients, a one-way sensitivity analysis was performed for each of these variables. The impact of these variables on the average number of radiotherapy fractions is illustrated by a tornado diagram (Fig. 1). The average number of radiotherapy fractions per pancreatic cancer patient varied between 10.8 and 12.6. The optimal fractionation tree for pancreatic cancer is shown in Fig. 2.

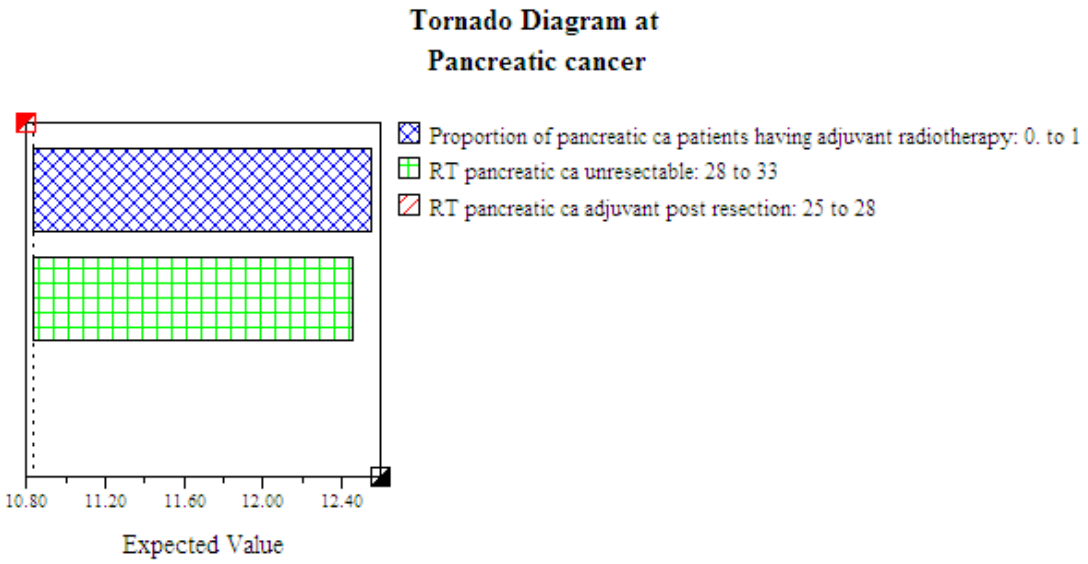

Figure 1. Pancreatic cancer. Sensitivity analysis

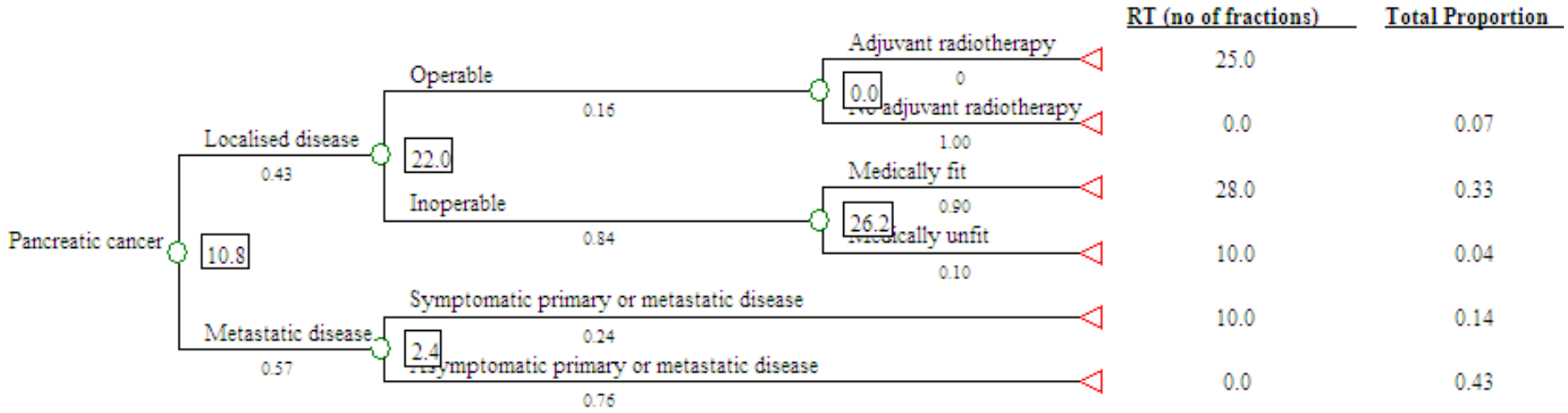

Figure 2. Pancreatic cancer. Optimal fractionation tree

.

4.4 Gastric Cancer

Table 1. Gastric Cancer. Number of fractions of radiotherapy - Sources of evidence

Outcome no (utilisation model	Clinical scenario (utilisation model)	Outcome no (fractionation model)	Clinical scenario (addition to fractionation model)	No of fractions	Range of no of fractions	Level of evidence	References	Notes	Proportion of all gastric cancer patients
13	TxNxM0, medically fit for surgery, T1N0, distant relapse, brain metastases	2	–	5	5-10	II	RCR guidelines (18)	4	0
14	TxNxM0, medically fit for surgery, T1N0, distant relapse, no brain metastases, painful bone metastases	3	–	1	1-5	I	RCR guidelines (18)	5	0
16	TxNxM0, medically fit for surgery	5	Postoperative chemoradio-therapy	25	25-28	II	NCCN guidelines (135)	2,3	0.34
		6	Perioperative chemotherapy	0	–	II	NCCN guidelines (135) NCI guidelines (136)	2	0.34

Outcome no (utilisation model	Clinical scenario (utilisation model)	Outcome no (fractionation model)	Clinical scenario (addition to fractionation model)	No of fractions	Range of no of fractions	Level of evidence	References	Notes	Proportion of all gastric cancer patients
18	TxNxM1, brain metastases	8	–	5	5-10	II	RCR guidelines (18)	4	0
19	TxNxM1, no brain metastases, painful bone metastases	9	–	1	1-5	I	RCR guidelines (18)	5	0

Proportion of all stomach cancer patients in whom radiotherapy is recommended	**0.34 (34%)**
Proportion of all cancer patients= 0.34 x 0.02=	**0.0068 (0.68%)**
Average number of fractions per gastric cancer patient=	**8.5**
Average number of fractions per treatment course = 8.5/0.34 =	**25**

Key to abbreviations in gastric cancer decision tree and tables

RCR – Royal College of Radiologists

NCCN – National Comprehensive Cancer network

NCI – National Cancer Institute

Table 2. Gastric Cancer. The incidence of attributes used to define number of radiotherapy fractions

Key	Population or subpopulation of interest	Attribute	Proportion of populations with this attribute	Quality of Information	References	Notes
A	All registry cancers	Gastric cancer	0.19	α	AIHW (16)	1

Gastric Cancer

The optimal radiotherapy fractionation model for gastric cancer was based on the optimal radiotherapy utilisation model for gastrointestinal cancer (1, 99).

Treatment Guidelines

The following clinical practice guidelines for the management of gastric cancer were identified:

- NCCN clinical practice guidelines on gastric cancer (volume 2.2010) (135)
- NCI PDQ guidelines on gastric cancer (2010) (136)
- BC Cancer Agency gastrointestinal cancer management guidelines (stomach) (2005) (137)
- SIGN Scottish national clinical guideline for the management of oesophageal and gastric cancer (2006) (138)
- The RCR radiotherapy dose-fractionation guidelines (18)

Explanatory Notes for Tables 1 and 2

1. Incidence of gastric cancer

Gastric cancer constituted 1.9% of all cancers occurring in Australia in 2005 (16).

2. Adjuvant treatment for stage IB to IV M0 gastric cancer: treatment options

The NCCN guidelines on gastric cancer (135) recommend perioperative chemotherapy for patients with T2 or higher tumours, based on the results from the Medical Research Council Adjuvant Gastric Infusional Chemotherapy (MAGIC) trial. The guidelines also recommend the treatment option of post-operative chemoradiotherapy, based on the results from the Intergroup trial

(INT) 0116, for patients with node positive disease or with T3 or higher tumours. The NCI guidelines on gastric cancer (136) recommend post-operative chemoradiotherapy for patients with T1N1 and T2N0 disease. For patients with more advanced disease, the guidelines recommend either post-operative chemoradiotherapy or perioperative chemotherapy as standard treatment options, based on the MAGIC and INT 0116 trials respectively.

In the INT 0116 study (139), 556 patients with completely resected stage 1B to stage IV (M0) adenocarcinoma of the stomach or gastrooesophageal junction were randomised to receive surgery alone or surgery and post-operative chemoradiotherapy. The radiotherapy dose was 45 Gy in 25 fractions. This study showed a 9% survival benefit with post-operative chemoradiotherapy. The 3-year overall survival rate was 50% with post-operative chemoradiotherapy, compared to 41% in patients who had surgery alone.

More recently, perioperative chemotherapy as a treatment option was investigated and shown to have a similar survival benefit in patients with locally advanced gastric cancer. In the MAGIC trial (140), 503 patients with stage II or higher adenocarcinoma of the stomach or of the lower third of the oesophagus were randomly assigned to receive chemotherapy before and after surgery or to receive surgery alone. In each group, 74% of the patients had stomach cancer. The 5-year overall survival was 36% for the perioperative chemotherapy group and 23% for the surgery alone group. The NCCN guidelines (135) state that the results of this study have established perioperative chemotherapy as another added option to the standard of care for patients with resectable gastric cancer.

Since the publication of the INT 0116 and MAGIC studies, clinicians' opinions remain divided regarding the relative efficacy of adjuvant chemoradiotherapy versus perioperative chemotherapy. This is the subject of a current multi-centre, prospective, randomised trial (TOP GEAR: Trial of pre-operative therapy for gastric and esophagogastric junction adenocarcinoma: A randomised phase II/III trial of pre-operative chemoradiotherapy versus pre-operative chemotherapy for resectable gastric cancer) comparing perioperative chemotherapy with adjuvant chemoradiotherapy. In this study, patients with

T3/4, N1-3, M0 resectable gastric adenocarcinoma are randomised to receive perioperative chemotherapy and surgery or to receive adjuvant chemoradiotherapy and surgery, with the chemoradiotherapy given pre-operatively.

In view of the guidelines recommendations that both perioperative chemotherapy and adjuvant chemoradiotherapy can be considered standard treatment options for this group of patients, patients with stage IB-IV (M0) gastric cancer fit for surgery were divided into two branches in the model: those recommended to have chemoradiotherapy and those recommended to have chemotherapy alone. For the purposes of the model, 50% of the patients were recommended to have either chemoradiotherapy or chemotherapy, assuming equally divided opinions amongst clinicians treating gastric cancer. Sensitivity analysis was performed modelling the proportion of patients having chemoradiotherapy from 0% to 100%, and modelling the proportion of patients having chemotherapy from 0% to 100%, to estimate the difference that would occur in fractionation if one of the two treatment extremes became standard practice.

3. Adjuvant chemoradiotherapy: radiotherapy dose

The NCCN guidelines (135) recommend a dose of 45 to 50.4 Gy (25 to 28 fractions in 1.8 Gy per fraction). In the INT 0116 study (139), patients received 45 Gy in 25 fractions. The dose fractionation schedule, 45 Gy in 25 fractions, was used in the model. A sensitivity analysis was performed to assess the impact of the range of number of fractions (25 to 28 fractions) on the average number of fractions per gastric cancer patient.

4. Radiotherapy for brain metastases

The dose fractionation schedule, 20 Gy in 5 fractions, was used in this model. A sensitivity analysis was conducted to assess the impact of the range of number of fractions (5 to 10 fractions) on the average number of fractions per gastric cancer patient (see chapter 18).

5. Radiotherapy for bone metastases

A single fraction of 8 Gy was used in this model. A sensitivity analysis was performed to assess the impact of the range of number of fractions (1 to 5 fractions) on the average number of fractions per gastric cancer patient (see chapter 18).

Sensitivity Analysis

The optimal number of fractions per gastric cancer patient was 8.5.

As discussed by Delaney et al (1, 99), there was uncertainty regarding the incidence data for T1N0 stomach cancer (0.06 to 0.20) and the data for the absence of metastatic disease at diagnosis (0.62 to 0.83).

The main controversy in the management of gastric cancer relates to the use of adjuvant treatment in patients with resectable gastric cancer. To model this uncertainty and the impact on the overall optimal average number of fractions for gastric cancer, three scenarios were used. In the first scenario, 50% of the patients were recommended having chemoradiotherapy and the other 50% recommended having chemotherapy. In the second scenario, all patients were recommended having chemoradiotherapy and no patients were recommended having chemotherapy. In the third scenario, no patients were recommended having chemoradiotherapy and all patients were recommended having chemotherapy.

A range of number of fractions was also considered appropriate for adjuvant radiotherapy post-surgery (25 to 28 fractions), and palliative radiotherapy for brain metastases (5 to 10 fractions) and bone metastases (1 to 5 fractions).

To assess the impact of these uncertainties on the average number of radiotherapy fractions in gastric cancer patients, a one-way sensitivity analysis was performed. The average number of radiotherapy fractions per gastric

cancer patient varied between 0 and 17. The large variation was due to the uncertainty on choice of adjuvant treatment in patients with resectable gastric cancer. The impact of these variables on the average number of radiotherapy fractions is illustrated by a tornado diagram (Fig. 1). The optimal fractionation tree for gastric cancer is shown in Fig. 2.

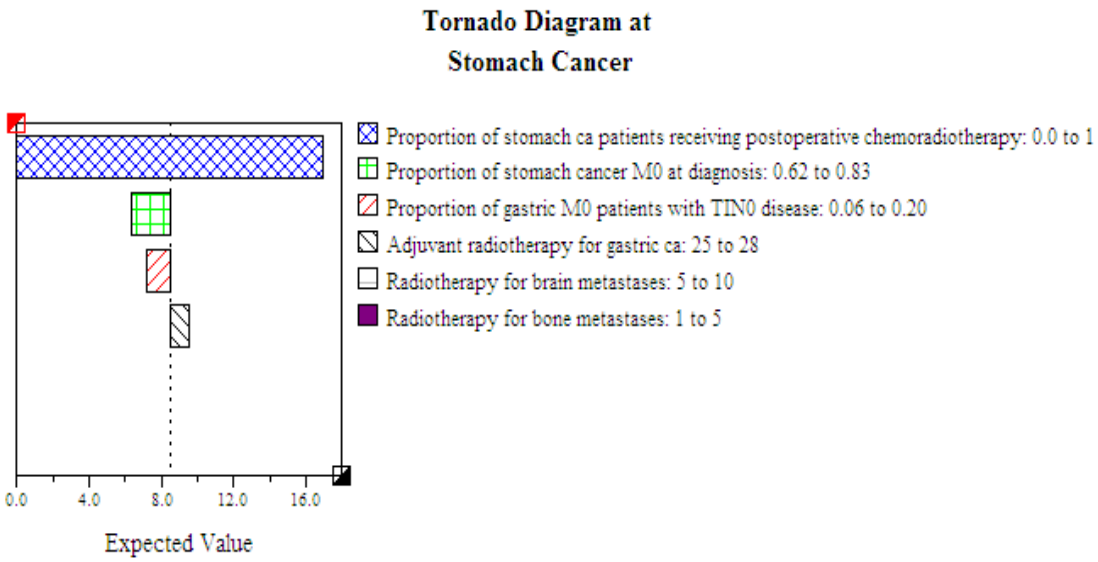

Figure 1. Gastric cancer. Sensitivity analysis

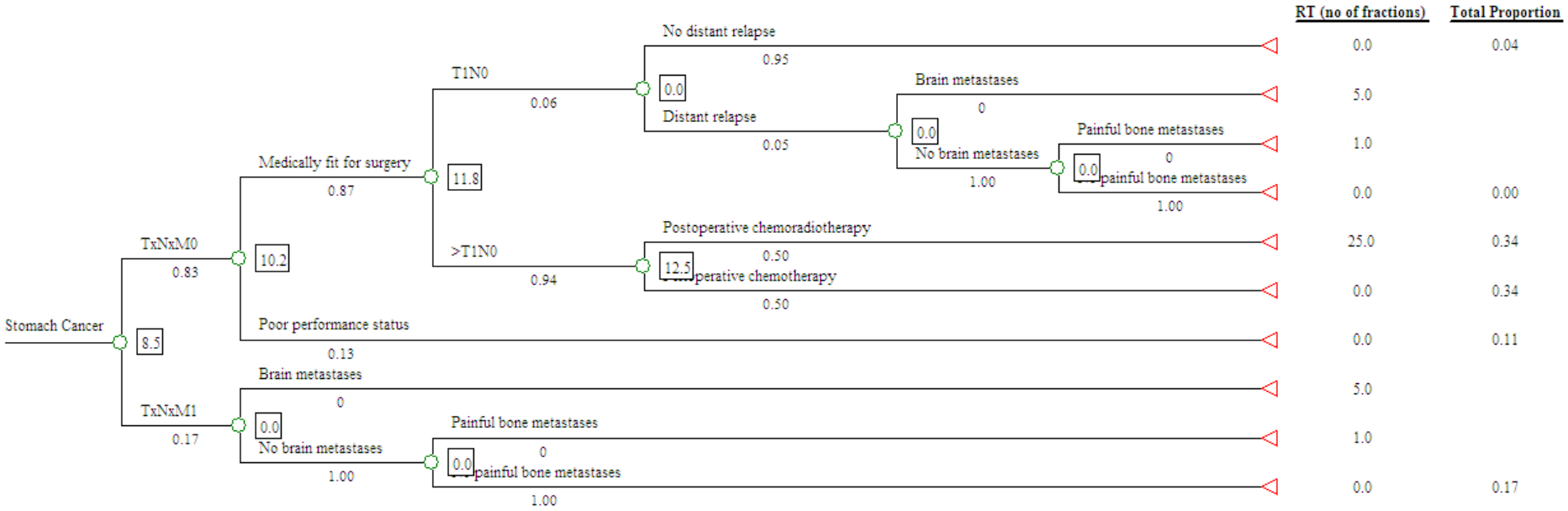

Figure 2. Gastric cancer. Optimal fractionation tree

4.5 Oesophageal Cancer

Table 1. Oesophageal Cancer. Number of fractions of radiotherapy - Sources of evidence

Outcome no (utilisation model)	Clinical scenario (utilisation model)	Outcome no (fractionation model)	Clinical scenario (addition to fractionation model)	No of fractions	Range of no of fractions	Level of evidence	References	Notes	Proportion of all oesophageal cancer patients
—	—	1	TxNxM0, fit for surgery, pre-operative radiotherapy	25	25-28	I	NCCN guidelines (141)	2	0
1	TxNxM0, fit for surgery, resection with clear margins, locoregional recurrence	2	TxNxM0, fit for surgery, no pre-operative radiotherapy, resection with clear margins, locoregional recurrence	25	25-28	—	NCCN guidelines (141)	8	0.05
2	TxNxM0, fit for surgery, resection with clear margins,	3	TxNxM0, fit for surgery, no pre-operative	5	5-10	II	RCR guidelines (18)	10	<0.01

Outcome no (utilisation model)	Clinical scenario (utilisation model)	Outcome no (fractionation model)	Clinical scenario (addition to fractionation model)	No of fractions	Range of no of fractions	Level of evidence	References	Notes	Proportion of all oesophageal cancer patients
	no locoregional recurrence, distant recurrence, brain metastases		radiotherapy, resection with clear margins, no locoregional recurrence, distant recurrence, brain metastases						
3	TxNxM0, fit for surgery, resection with clear margins, no locoregional recurrence, distant recurrence, no brain metastases, painful bone metastases	4	TxNxM0, fit for surgery, no pre-operative radiotherapy, resection with clear margins, no locoregional recurrence, distant	1	1-5	I	RCR guidelines (18)	11	0.01

Outcome no (utilisation model)	Clinical scenario (utilisation model)	Outcome no (fractionation model)	Clinical scenario (addition to fractionation model)	No of fractions	Range of no of fractions	Level of evidence	References	Notes	Proportion of all oesophageal cancer patients
			recurrence, no brain metastases, painful bone metastases						
6	TxNxM0, fit for surgery, no resection performed or margins not clear	7	TxNxM0, fit for surgery, no pre-operative radiotherapy, resection performed and margins not clear	25	25-30	II	RCR guidelines (18)	4	0.03
		8	TxNxM0, fit for surgery, no pre-operative radiotherapy, resection not performed	25	25-28	II	NCCN guidelines (141) RCR guidelines (18)	5	0.06

Outcome no (utilisation model)	Clinical scenario (utilisation model)	Outcome no (fractionation model)	Clinical scenario (addition to fractionation model)	No of fractions	Range of no of fractions	Level of evidence	References	Notes	Proportion of all oesophageal cancer patients
7	TxNxM0, not fit for surgery	9	Fit for chemotherapy	25	25-28	II	NCCN guidelines (141) RCR guidelines (18)	6	0.33
		10	Not fit for chemotherapy	5	5-10	–	RCR guidelines (18) SIGN guidelines (138)	6	0.06
8	TxNxM1, symptomatic loco-regional disease	11	–	5	5-10	–	RCR guidelines (18) SIGN guidelines (138)	9	0.24
9	TxNxM1, no symptomatic loco-regional disease, brain metastases	12	–	5	5-10	II	RCR guidelines (18)	10	0.01
10	TxNxM1, no symptomatic loco-regional disease, no brain metastases, painful bone metastases	13	–	1	1-5	I	RCR guidelines (18)	11	0.02

Proportion of all oesophageal cancer patients in whom radiotherapy is recommended	**0.82 (82%)**
Proportion of all cancer patients = 0.82 x 0.01 =	**0.0082 (0.82%)**
Average number of fractions per oesophageal cancer patient	**13.4**
Average number of fractions per treatment course = 13.4/0.82 =	**16.3**

Key to abbreviations in oesophageal cancer decision tree and tables

NCCN – National Comprehensive Cancer network

RCR – Royal College of Radiologists

SIGN – Scottish Intercollegiate Guidelines Network

MRC – Medical Research Council

Table 2. Oesophageal Cancer. The incidence of attributes used to define number of radiotherapy fractions

Key	Population or subpopulation of interest	Attribute	Proportion of populations with this attribute	Quality of Information	References	Notes
A	All registry cancers	Oesophageal cancer	0.01	α	AIHW (16)	1
B	Stage TxNxM0, operable disease, no pre-operative therapy, proceed to surgery	Resection performed with clear margins	0.70 0.64 0.54	ζ ζ θ	Alexiou et al (142) Junginger and Dutkowski (143) MRC Oesophageal Cancer Working Party (144)	3
C	Stage TxNxM0, operable disease, no pre-operative therapy, proceed to surgery, no resection performed/resection performed with involved margins	Resection performed with involved margins	0.33 0.75 0.63	ζ ζ θ	Alexiou et al (142) Junginger and Dutkowski (143) MRC Oesophageal Cancer Working Party (144)	3
D	Stage TxNxM0, no surgery	Fit for chemotherapy	0.84	γ	Smith et al (145)	7

Oesophageal Cancer

The optimal radiotherapy fractionation model for oesophageal cancer was based on the optimal radiotherapy utilisation model for gastrointestinal cancer (1, 99).

Treatment Guidelines

The following clinical practice guidelines for the management of oesophageal cancer were identified:

- NCCN clinical practice guidelines on oesophageal cancer (version 2.2010) (141)
- NCI PDQ guidelines on oesophageal cancer (2010) (146)
- BC Cancer Agency gastrointestinal cancer management guidelines (oesophagus and cardia) (2005) (147)
- Cancer Care Ontario guidelines on pre-operative or post-operative therapy for resectable oesophageal cancer (2010) (148)
- Cancer Care Ontario guidelines on combined modality radiotherapy and chemotherapy in the non-surgical management of localised carcinoma of the oesophagus (2010) (149)
- SIGN Scottish national clinical guideline for the management of oesophageal and gastric cancer (2006) (138)
- The RCR radiotherapy dose-fractionation guidelines (2006) (18)

Explanatory Notes for Tables 1 and 2

1. Incidence of oesophageal cancer

Oesophageal cancer constituted 1.2% of all cancers occurring in Australia in 2005 (16).

2. Role of pre-operative radiotherapy for patients with operable oesophageal cancer

Not all patients with non-metastatic oesophageal cancer will be eligible to undergo surgery due to advanced stage of the disease, or due to age, co-morbidity or general performance status reasons. In addition, some patients will refuse surgery and prefer other treatment alternatives. The term "operable" refers to patients who are considered fit for an operation and who after staging investigations are thought to have a surgically removable tumour. In the optimal radiotherapy utilisation model, it was estimated that 42% to 59% of patients with non-metastatic oesophageal cancer had operable disease (1, 99).

The role of pre-operative radiotherapy in oesophageal cancer remains controversial. In the optimal radiotherapy utilisation model (1, 99), patients were not recommended to have pre-operative radiotherapy based on clinical practice guideline recommendations and clinical trial results available at the time.

A number of meta-analyses have since been published and incorporated into the more recent clinical practice guidelines. Currently available guidelines have non-uniform recommendations on pre-operative radiotherapy. The RCR dose-fractionation guidelines (18) state that two meta-analyses suggest minor improvement in 3-year survival with pre-operative chemoradiotherapy (150-151), and that further evidence about the value of this treatment is required. The SIGN guidelines (138) recommend pre-operative chemoradiotherapy only in the setting of clinical trials. The BC Cancer Agency guidelines (147) state that there are no convincing data that pre-operative therapy substantially improves the results obtained with surgery alone. The NCI guidelines (146) state that the role of pre-operative chemoradiotherapy is under evaluation.

In the Cancer Care Ontario guidelines on neoadjuvant and adjuvant treatment for resectable oesophageal cancer published in 2004 (152), surgery alone was recommended as the standard practice. Updated guidelines were published in 2010 (148) which recommend pre-operative cisplatin-based chemotherapy with radiotherapy as the preferred modality for patients with surgically resectable

disease based on meta-analyses which demonstrated a survival benefit with this approach (150-151, 153).

The NCCN guidelines (141) state that pre-operative chemoradiotherapy followed by surgery is the most common approach for patients with resectable oesophageal cancer, although this approach remains investigational. They also make reference to the meta-analyses mentioned above, and recommend a dose of 50 to 50.4 Gy in 1.8 to 2 Gy per fraction (25 to 28 fractions).

At the present time it would appear reasonable, based on recommendations of the majority of the clinical guidelines, that pre-operative chemoradiotherapy should not be routinely recommended to patients with operable oesophageal cancer. However, given that some of the guidelines recommend pre-operative chemoradiotherapy, a sensitivity analysis was performed to address this controversy with pre-operative chemoradiotherapy being given as the alternative. The dose fractionation schedule, 50 Gy in 25 fractions, was used in the model for patients recommended to have pre-operative chemoradiotherapy. A sensitivity analysis was performed to assess the impact of the range of number of fractions (25 to 28 fractions) on the average number of fractions per oesophageal cancer patient.

3. Proportion of patients with operable TxNxM0 oesophageal cancer who have resection with unclear margins or do not proceed with resection

Some patients who undergo surgery are found to have unresectable disease intra-operatively and therefore do not have resection performed. There are also patients who undergo resection and are found to have involved margins. In the optimal radiotherapy utilisation model (1, 99), patients with operable disease were divided into two branches, one branch representing patients who had resection performed with clear margins, the other branch representing patients who did not. Patients of the second branch were recommended to have radiotherapy, and included patients who had resection performed with unclear margins, and patients who had no resection performed.

Because different dose fractionation schedules are recommended in the guidelines for these two scenarios, this branch was further divided into two branches in this model: one branch representing patients who have resection performed with unclear margins, and those who have no resection performed.

Alexiou et al (142) reviewed the outcomes of patients who underwent surgery for oesophageal cancer at a single specialist thoracic surgical unit. Of the 655 operable patients, 457 patients (70%) had a resection with clear margins. Of the remaining 198 patients who underwent operation, 66 patients (33%) had a resection with unclear margins, and 132 patients (67%) did not have a resection. Junginger and Dutkowski (143) reported on 190 patients who underwent surgery for oesophageal cancer. One hundred and twenty-one patients (64%) had a resection with clear margins. Of the remaining 69 patients who underwent operation, 52 patients (75%) had a resection with involved margins, and 17 patients (25%) had exploratory laparotomy with no resection performed. The MRC Oesophageal Cancer Working Party conducted a multi-institutional randomised controlled trial in which patients with oesophageal cancer were randomised to either pre-operative chemotherapy followed by surgical resection or immediate surgical resection (144). Of the 397 patients randomised to the immediate surgical resection arm, 215 patients (54%) had a complete resection. Of the remaining 182 patients, 115 patients (63%) had a resection with margins involved, and 67 patients (37%) did not have a resection. The data reported by Alexiou et al were used as they represented data from a comprehensive single institution database and had the largest number of patients. A sensitivity analysis was performed to assess the impact of the different proportions reported in the literature on the average number of radiotherapy fractions per oesophageal cancer patient.

4. Radiotherapy for patients with operable TxNxM0 oesophageal cancer who have resection with involved margins

In the optimal radiotherapy utilisation model (1, 99), patients who have undergone resection with involved margins were recommended to have post-operative radiotherapy, based on the results of a prospective randomised

controlled study which showed that post-operative radiotherapy resulted in improved local control (154). In this study, patients were randomised to radiotherapy or no treatment after resection of oesophageal cancer. There was an improvement in local control for those with residual disease following resection but no benefit for those who had clear surgical margins. A dose of 52.5 Gy in 15 fractions, 3.5 Gy per fraction, 3 fractions per week, was used. The authors commented that a larger than usual dose fraction was used in response to the high demand on facilities at their institute at the time.

The SIGN guidelines (138) state that post-operative radiotherapy can reduce local recurrence rates in patients but has not shown a survival benefit, making reference to a systematic review of radiotherapy trials in oesophageal cancer (155). In the randomised trials on post-operative radiotherapy included in the systematic review, doses of 45 to 55.8 Gy in 1.8 Gy per fraction were used (154, 156-157). In one study, the dose fractionation schedule, 52.5 Gy in 15 fractions, was used, as discussed above (154). The guidelines comment that there is currently insufficient evidence on which to base a recommendation and that it may be appropriate to consider post-operative radiotherapy for patients with a high risk of local recurrence because of involved circumferential margin but low risk of early distant relapse with no or low numbers of involved lymph nodes.

The RCR guidelines (18) make reference to a study of Chinese patients with squamous cell carcinoma, in which patients were randomised to surgery or surgery and post-operative radiotherapy to a dose of 60 Gy, which showed a survival benefit with post-operative radiotherapy (158). The guidelines comment that it is unclear whether the results can be applied to the UK setting where the majority of oesophageal cancer patients have adenocarcinoma and many patients receive pre-operative chemotherapy. The guidelines state that case selection for post-operative radiotherapy is difficult, but a suitable subset of patients might be those with a positive circumferential margin but with a low burden of positive lymph nodes. The guidelines state that for selected high risk patients with R1 resected oesophageal tumours, post-operative radiotherapy of

45 to 60 Gy in daily 2 Gy fractions, with or without chemotherapy, has a questionable role.

The dose fractionation schedule, 45 Gy in 25 fractions, was used in the model. A sensitivity analysis was performed to assess the impact of the range of number of fractions (25 to 30 fractions) on the average number of fractions per oesophageal cancer patient.

5. Radiotherapy for patients with operable TxNxM0 oesophageal cancer who have no resection performed

For patients who have unresectable tumours, the NCCN guidelines (141) and the SIGN guidelines (138) recommend concurrent chemoradiotherapy for patients who can tolerate chemotherapy. The NCCN guidelines (141) recommend a dose of 50 Gy in 25 fractions or 50.4 Gy in 28 fractions. The same dose fractionation schedules are recommended in the RCR dose-fractionation guidelines (18). These recommended dose fractionation schedules are based on the RTOG 85-01 (159-161) and the INT 0123 (162) studies. In the RTOG 85-01 study (159-161), patients were randomised to receive concurrent chemoradiotherapy (50 Gy in 25 fractions) or radiotherapy alone (64 Gy in 32 fractions). Chemoradiotherapy significantly increased overall survival compared to radiotherapy alone. The 5-year overall survival rate was 26% in the combined treatment group and 0% in the radiotherapy group. In the INT 0123 study (162), all patients received concurrent chemoradiotherapy, and were randomised to receive one of two different radiotherapy doses: 50.4 Gy in 28 fractions or 64.8 Gy in 36 fractions. This study showed that the use of higher radiotherapy doses did not result in an improvement in locoregional control or survival.

The shorter dose fractionation schedule, 50 Gy in 25 fractions, was used in this model. A sensitivity analysis was performed to assess the impact of the range of number of fractions (25 to 28 fractions) on the average number of fractions per oesophageal cancer patient.

6. Radiotherapy for patients with TxNxM0 oesophageal cancer not undergoing surgery

In the optimal radiotherapy utilisation model (1, 99), patients who were considered to have inoperable non-metastatic disease were recommended to have radiotherapy. This branch included patients who elect not to have surgery, patients who have unresectable tumours, and patients who are medically unfit for surgery. For these patients, the NCCN guidelines (141) and the SIGN guidelines (138) recommend concurrent chemoradiotherapy for patients who can tolerate chemotherapy. Dose fractionation schedules of 50 Gy in 25 fractions and 50.4 Gy in 28 fractions are recommended in the NCCN guidelines (141) and RCR dose-fractionation guidelines (18). The shorter dose fractionation schedule, 50 Gy in 25 fractions, was used in this model. A sensitivity analysis was performed to assess the impact of the range of number of fractions (25 to 28 fractions) on the average number of fractions per oesophageal cancer patient.

For patients who are considered unfit for chemotherapy, the NCCN guidelines (141) recommend palliative radiotherapy or best supportive care, with no specific dose fractionation schedules recommended. The RCR dose-fractionation guidelines (18) state that the role of palliative radiotherapy has a poor evidence base, and that short fractionation regimens are widely used with safety in patients for whom more radical treatment is inappropriate. The guidelines state that the dose fractionation schedules of 20 Gy in 5 fractions and 30 Gy in 10 fractions are acceptable. The SIGN guidelines (138) state that expert opinion suggests doses in the range of 20 Gy in 5 fractions and 30 Gy in 10 fractions are acceptable, making reference to the RCR dose-fractionation guidelines (18).

For the purposes of this model, the dose fractionation schedule, 20 Gy in 5 fractions, was used for patients with non-metastatic oesophageal cancer who do not undergo surgery and are unfit for chemotherapy. A sensitivity analysis was conducted to assess the effect of the range of number of fractions (5 to 10 fractions) on the average number of fractions per oesophageal cancer patient.

7. **Proportion of patients with TxNxM0 oesophageal cancer not undergoing surgery who are fit for chemotherapy**

Smith et al (145) assessed the outcomes of 2626 patients aged > 65 years from the SEER-Medicare cohort who were diagnosed with non-metastatic oesophageal cancer and underwent radiotherapy, chemoradiotherapy, or surgery +/- pre-operative chemoradiotherapy from 1992 to 2002. Of the patients who did not undergo surgery, 84% had a Charlson co-morbidity score of 0-1 (mild to moderate co-morbidities), and 16% had a score of 2 (severe co-morbidities). These data were used to estimate the proportion of patients with non-metastatic oesophageal cancer not undergoing surgery who are considered fit for chemotherapy. For the purposes of this model, patients with a Charlson co-morbidity score of 0-1 were considered fit for chemotherapy.

8. **TxNxM0 oesophageal cancer, locoregional recurrence after resection**

The NCCN guidelines (141) state that for patients with local or regional relapse only after initial resection without previous chemoradiotherapy, concurrent chemoradiotherapy is the preferred treatment. The guidelines recommend a dose of 50 to 50.4 Gy in 1.8 to 2 Gy per fraction (25 to 28 fractions). The dose fractionation schedule, 50 Gy in 25 fractions, was used in the model. A sensitivity analysis was performed to assess the impact of the range of number of fractions (25 to 28 fractions) on the average number of fractions per oesophageal cancer patient.

9. **TxNxM1 oesophageal cancer, symptomatic locoregional disease**

The dose fractionation schedule, 20 Gy in 5 fractions, was used for patients with metastatic oesophageal cancer with symptomatic locoregional disease recommended to have palliative radiotherapy, as per the recommendations in the RCR dose-fractionation guidelines (18) and SIGN guidelines (138), as discussed in note 6. A sensitivity analysis was conducted to assess the effect of

the range of number of fractions (5 to 10 fractions) on the average number of fractions per oesophageal cancer patient.

10. Radiotherapy for brain metastases

The dose fractionation schedule, 20 Gy in 5 fractions, was used in this model. A sensitivity analysis was conducted to assess the impact of the range of number of fractions (5 to 10 fractions) on the average number of fractions per oesophageal cancer patient (see chapter 18).

11. Radiotherapy for bone metastases

A single fraction of 8 Gy was used in this model. A sensitivity analysis was performed to assess the impact of the range of number of fractions (1 to 5 fractions) on the average number of fractions per oesophageal cancer patient (see chapter 18).

Sensitivity Analysis

The optimal number of fractions per oesophageal cancer patient was 13.4.

In the model, patients deemed to have operable disease were not recommended to have pre-operative radiotherapy, but because of the uncertainty about the role of pre-operative radiotherapy in the guidelines, the alternative of having pre-operative radiotherapy was modelled in sensitivity analysis.

As discussed by Delaney et al (1, 99), there was also uncertainty and variation in other data items which were:

- the proportion of patients with non-metastatic oesophageal cancer considered operable after pre-operative assessment (0.42 to 0.59)
- the proportion of patients with operable disease who have resection with clear margins (0.54 to 0.70)

- the proportion of patients who do not have complete resection who have resection with unclear margins (0.33 to 0.75)
- the proportion of patients who develop distant metastases following surgical treatment (0.18 to 0.30)
- the proportion of patients with metastatic disease who have painful bone metastases (0.16 to 0.33)

A range of number of fractions was also considered appropriate for pre-operative radiotherapy for operable oesophageal cancer (25 to 28 fractions), radiotherapy for locoregional recurrence (25 to 28 fractions), post-operative radiotherapy for involved margins (25 to 30 fractions), definitive radiotherapy for inoperable or unresectable disease (25 to 28 fractions), palliative radiotherapy for patients with non-metastatic disease unfit for chemotherapy and patients with metastatic disease with symptomatic locoregional disease (5 to 10 fractions), palliative radiotherapy for brain metastases (5 to 10 fractions) and palliative radiotherapy for bone metastases (1 to 5 fractions).

To assess the impact of these uncertainties on the overall estimate of the average number of radiotherapy fractions in oesophageal cancer patients, a one-way sensitivity analysis was performed for each of these variables, as illustrated by the tornado diagram below (Fig. 1). The average number of radiotherapy fractions per oesophageal cancer patient varied between 12.3 and 17.0. This range of number of fractions was most influenced by the uncertainty of the role of pre-operative radiotherapy. The optimal fractionation tree for oesophageal cancer is shown in Fig. 2.

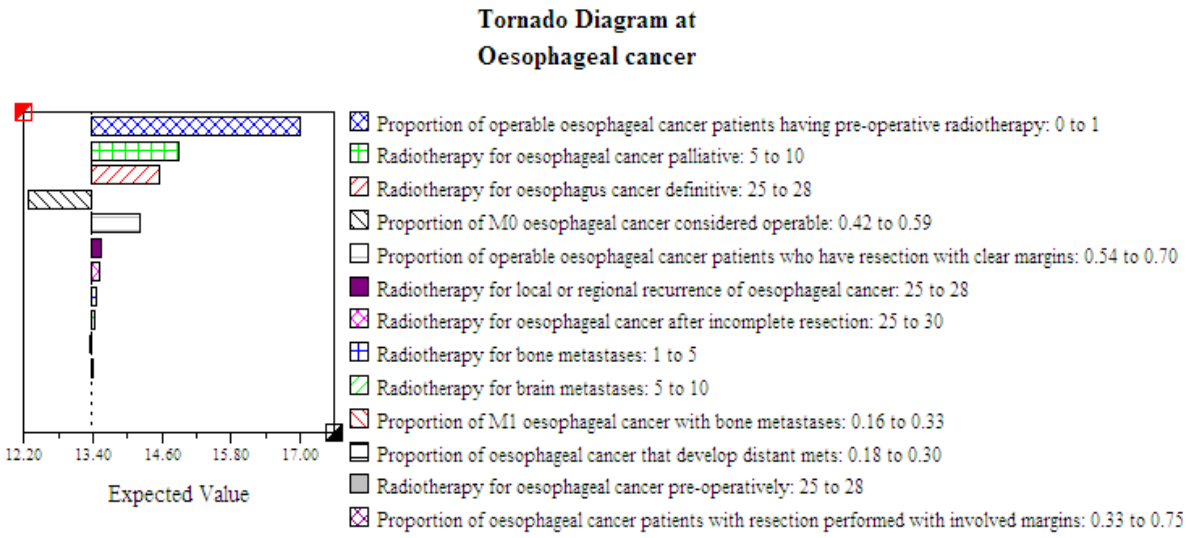

Figure 1. Oesophageal cancer. Sensitivity analysis

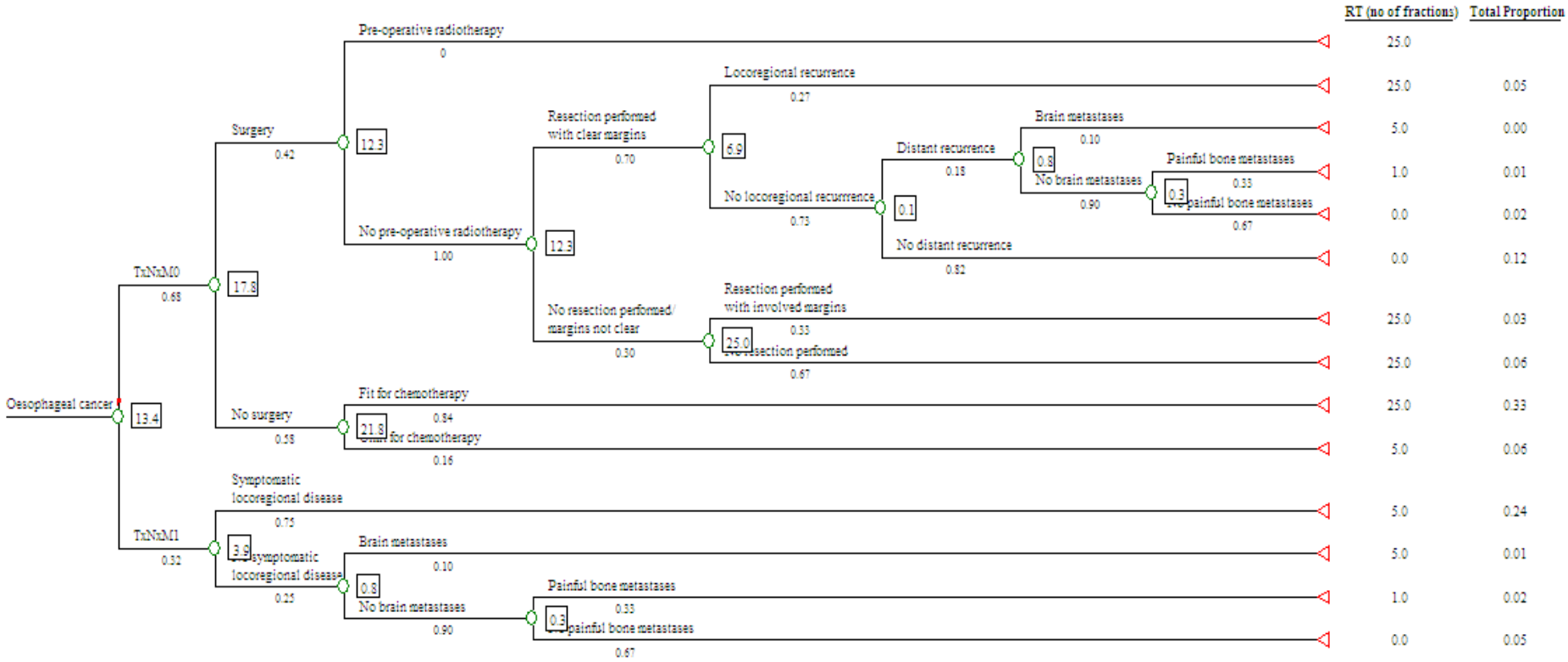

Figure 2. Oesophageal cancer. Optimal fractionation tree

.

4.6 Liver Cancer

Liver Cancer

Liver cancer constituted 1.1% of all cancers occurring in Australia in 2005 (16). In the optimal radiotherapy utilisation model for gastrointestinal cancer (1, 99), Delaney et al found no patients with liver cancer who should optimally receive radiotherapy, according to evidence-based clinical guidelines available at the time.

The following clinical practice guidelines for the management of liver cancer were identified:

- NCCN clinical practice guidelines on hepatobiliary cancers (version 2.2010) (163)
- NCI PDQ guidelines on adult primary liver cancer (2010) (164)
- BC Cancer Agency gastrointestinal cancer management guidelines (liver) (2006) (165)

Surgery remains the treatment of choice for early primary liver cancer. In the NCCN guidelines (163), radiotherapy and chemoradiotherapy are listed as options for patients with unresectable hepatocellular carcinoma who are not transplant candidates. The guidelines state that there are limited data to support the use of radiotherapy alone in this setting, and this recommendation has been classified as a category 2B recommendation (based on lower level evidence, with non-uniform NCCN consensus). The guidelines recommend chemoradiotherapy to be considered only in the context of a clinical trial.

The NCI guidelines (164) mention that surgery, chemotherapy and radiotherapy may be combined in clinical trials for patients with a dominant hepatic mass and multifocal involvement with small amounts of tumour. The BC Cancer Agency guidelines (165) state that radiotherapy is generally not used to treat hepatocellular carcinoma, and that conformal radiotherapy is being evaluated.

According to the clinical guidelines, the role of radiotherapy remains not well established. It is therefore estimated that the optimal number of fractions for these patients will be 0.

4.7 Gallbladder Cancer

Table 1. Gallbladder Cancer. Number of fractions of radiotherapy - Sources of evidence

Outcome no (utilisation model)	Clinical scenario (utilisation model)	Outcome no (fractionation model)	Clinical scenario (addition to fractionation model)	No of fractions	Range of no of fractions	Level of evidence	References	Notes	Proportion of all gallbladder cancer patients
8	No metastatic disease, good performance status, inoperable	2	–	25	25-28	IV	Houry et al (166)	2	0.13

Proportion of all gallbladder cancer patients in whom radiotherapy is recommended	**0.13 (13%)**
Proportion of all cancer patients = 0.13 x 0.01 =	**0.0013 (0.13%)**
Average number of fractions per gallbladder cancer patient	**3.2**
Average number of fractions per treatment course = 3.2/0.13 =	**24.6**

Table 2. Gallbladder Cancer. The incidence of attributes used to define number of radiotherapy fractions

Key	Population or subpopulation of interest	Attribute	Proportion of populations with this attribute	Quality of Information	References	Notes
A	All registry cancers	Gallbladder cancer	0.01	α	AIHW (16)	1

Gallbladder Cancer

The optimal radiotherapy fractionation model for gallbladder cancer was based on the optimal radiotherapy utilisation model for gastrointestinal cancer (1, 99).

Treatment Guidelines

The following clinical practice guidelines for the management of gallbladder cancer were identified:

- NCCN clinical practice guidelines on hepatobiliary cancers (2010) (163)
- NCI PDQ guidelines on gallbladder cancer (2010) (167)
- BC Cancer Agency gastrointestinal cancer management guidelines (gallbladder) (2006) (168)

Explanatory Notes for Tables 1 and 2

1. Incidence of gallbladder cancer

Gallbladder cancer constituted 0.6% of all cancers occurring in Australia in 2005 (16).

2. Radiotherapy for unresectable localised gallbladder cancer

Surgery remains the only curative treatment for gallbladder cancer (163, 167-168). In the optimal radiotherapy utilisation model (1, 99), patients with unresectable localised disease with good performance status were recommended to have radiotherapy based on recommendations of the clinical guidelines.

No specific dose fractionation schedules are recommended in the guidelines. The BC Cancer Agency guidelines on gallbladder cancer (168) recommend that radiotherapy be used for palliative management of locally advanced disease. The NCI guidelines (167) recommend radiotherapy as a palliative treatment

option, and state that clinical trials are in progress to improve local control by radiotherapy with or without radiosensitiser drugs, and recommend consideration of patients for these clinical trials when possible. The NCCN guidelines (163) recommend chemoradiotherapy for these patients. The guidelines state that, due to the low incidence of biliary tract cancers, most chemoradiotherapy studies are not randomised, have small numbers of patients, and include patients with gallbladder cancer and cholangiocarcinoma. The guidelines conclude that there are limited clinical trial data to define a standard regimen.

Houry et al (166) reviewed publications on the role of radiotherapy in gallbladder cancer from 1974 to 2000. Collected data suggested a slight improvement in survival after adjuvant and palliative radiotherapy. They recommended an intraoperative radiotherapy or brachytherapy boost of 15 Gy to the gross lesion or residual lesion after resection, followed by external beam radiotherapy of 45 to 50 Gy (25 to 28 fractions in 1.8 Gy per fraction). The dose fractionation schedule, 45 Gy in 25 fractions, was used in the model. A sensitivity analysis was performed to assess the impact of the range of number of fractions (25 to 28 fractions) on the average number of fractions per gallbladder cancer patient.

Sensitivity Analysis

The optimal number of fractions per gallbladder cancer patient was 3.2.

As discussed by Delaney et al (1, 99), there was uncertainty and variation in the proportion of patients with non-metastatic gallbladder cancer who have resectable disease. In the optimal radiotherapy utilisation model, a weighted mean of 65% was used in the decision tree and a sensitivity analysis performed to assess the impact of this variation on the overall radiotherapy utilisation rate. The same sensitivity analysis was performed in this model to assess the impact on the average number of fractions per gallbladder cancer patient. The average number of fractions varied between 0.4 and 5.3 (Fig. 1).

For patients recommended to have radiotherapy for unresectable localised gallbladder cancer, a sensitivity analysis was conducted to assess the impact of the range of number of fractions (25 to 28 fractions) on the average number of fractions per gallbladder cancer patient. The average number of fractions varied slightly between 3.2 and 3.6 (Fig. 1). The optimal fractionation tree for gallbladder cancer is shown in Fig. 2.

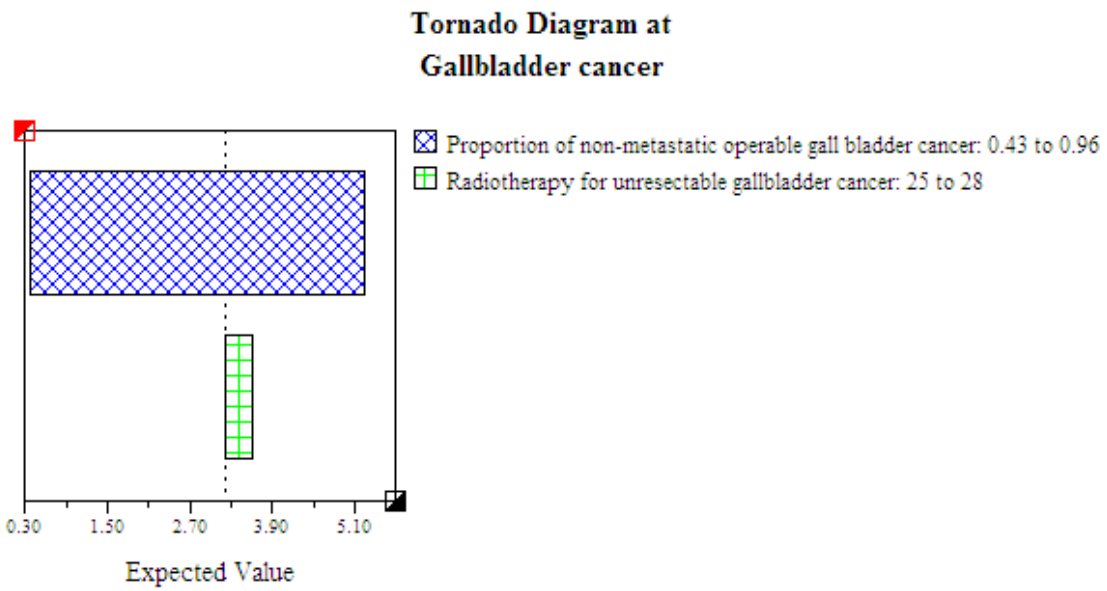

Figure 1. Gallbladder cancer. Sensitivity analysis

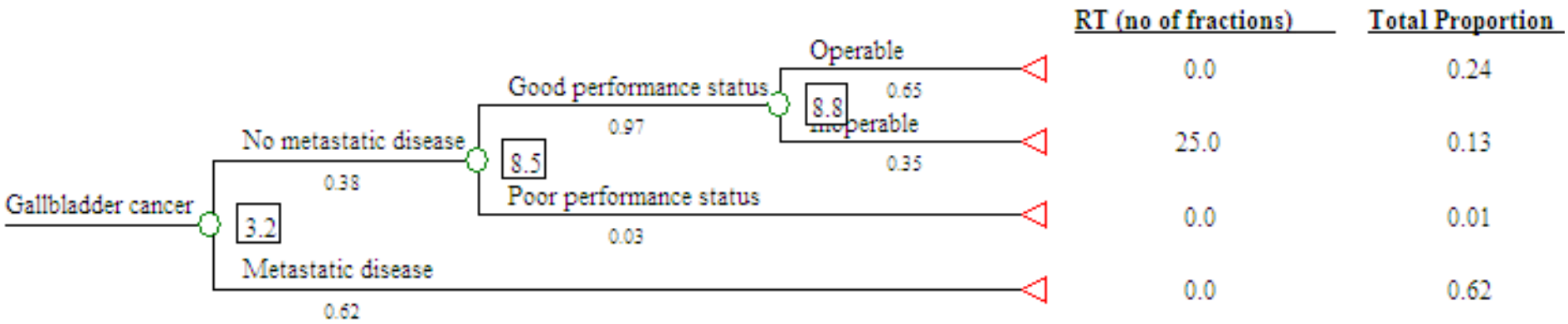

Figure 2. Gallbladder cancer. Optimal fractionation tree

4.8 Small Intestinal Cancer

Small Intestinal Cancer

Small intestinal cancer constituted 0.4% of all cancers occurring in Australia in 2005 (16). It was not included in the original optimal radiotherapy utilisation model (1-2).

The following clinical practice guidelines for the management of small intestinal cancer were identified:

- NCI PDQ guidelines on small intestine cancer (2010) (169)
- BC Cancer Agency gastrointestinal cancer management guidelines (small bowel malignancies) (2007) (170)

The NCI guidelines (169) and BC Cancer Agency guidelines (170) recommend radical surgery as the only curative treatment for patients with small intestinal cancer. The guidelines recommend surgical bypass or palliative resection as palliative treatment options. The NCI guidelines (169) also recommend radiotherapy as a palliative treatment option, however there is no high level evidence to support this approach.

According to the clinical guidelines, the role of radiotherapy is not well established. It was therefore estimated that the optimal number of fractions for patients with small intestinal cancer would be 0.

4.9 Anal Cancer

Table 1. Anal Cancer. Number of fractions of radiotherapy - Sources of evidence

Outcome no (utilisation model)	Clinical scenario (utilisation model)	Outcome no (fractionation model)	Clinical scenario (addition to fractionation model)	No of fractions	Range of no of fractions	Level of evidence	References	Notes	Proportion of all anal cancer patients
−	−	1	Stage TxNxM0, stage T1N0M0	28	25−28	III	NCCN guidelines (171) RCR guidelines (18)	3	0.10
−	−	2	Stage TxNxM0, stage T2N0M0	28	25−32	III	NCCN guidelines (171) RCR guidelines (18)	3	0.23
−	−	3	Stage TxNxM0, stage T3-4 or N+ M0	30	28−32	III	NCCN guidelines (171) RCR guidelines (18)	3	0.53
−	−	4	Stage TxNxM1	5	5−10	−	−	4	0.13

Proportion of all anal cancer patients in whom radiotherapy is recommended	**1 (100%)**
Proportion of all cancer patients = 1 x 0.003 =	**0.003 (0.3%)**
Average number of fractions per anal cancer patient	**26.1**
Average number of fractions per treatment course = 26.1/1 =	**26.1**

Key to abbreviations in anal cancer decision tree and tables

NCCN – National Comprehensive Cancer network

RCR – Royal College of Radiologists

Table 2. Anal Cancer. The incidence of attributes used to define number of radiotherapy fractions

Key	Population or subpopulation of interest	Attribute	Proportion of populations with this attribute	Quality of Information	References	Notes
A	All registry cancers	Anal cancer	0.003	α	AIHW (16)	1
B	Anal cancer	Stage TxNxM0	0.87	γ	SEER (172)	2
C	Stage TxNxM0	Stage T1N0M0	0.12	ζ	Mitchell et al (173)	2
D	Stage TxNxM0	Stage T2N0M0	0.27	ζ	Mitchell et al (173)	2
E	Stage TxNxM0	Stage T3-4/N+M0	0.61	ζ	Mitchell et al (173)	2

Anal Cancer

Anal cancer was not included in the original optimal radiotherapy utilisation model (1-2).

Treatment Guidelines

The following clinical practice guidelines for the management of anal cancer were identified:

- NCCN clinical practice guidelines on anal carcinoma (version 1.2011) (171)
- NCI PDQ guidelines on anal cancer (2010) (174)
- RCR dose-fractionation guidelines (2006) (18)
- BC Cancer Agency gastrointestinal cancer management guidelines (anus) (2005) (175)
- Cancer Care Ontario guidelines on management of squamous cell cancer of the anal canal (2009) (176)

Explanatory Notes for Tables 1 and 2

1. Incidence of anal cancer

Anal cancer constituted 0.3% of all cancers occurring in Australia in 2005 (16).

2. Stage data

According to the SEER database (172), 91% of patients diagnosed with anal cancer between 2000 and 2008 had stage data available. Of these patients, 13% had metastatic disease.

Mitchell et al (173) reported on 49 patients with non-metastatic anal cancer who were treated at the University of Florida. Six patients (12%) had T1N0 disease,

13 patients (27%) had T2N0 disease, and 30 patients (61%) had T3, T4 or node positive disease.

3. Non-metastatic anal cancer: radiotherapy dose

The NCCN guidelines (171) recommend concurrent chemoradiotherapy for patients with non-metastatic anal cancer. The guidelines recommend a minimum dose of 45 Gy in 25 fractions, with an additional boost of 9 to 14 Gy (total dose 54 to 59 Gy in 30 to 32 fractions) for patients with T3, T4, node-positive disease or patients with T2 residual disease after 45 Gy.

The guidelines make reference to the study reported by Ferrigno et al (177) in which 43 anal cancer patients were treated with chemoradiotherapy. The median radiotherapy dose at the whole pelvis and at the primary tumour was 45 Gy and 55 Gy respectively. Overall survival and colostomy-free survival at 5 years was 68% and 52% respectively. Local control with sphincter preservation was 79%. Local control was higher among patients who received more than 50 Gy at the primary tumour. The guidelines also make reference to the study reported by Huang et al (178) in which patients with T3, T4 or node positive anal cancer were treated with chemoradiotherapy. The median radiotherapy dose was 54 Gy. The 2-year local recurrence-free probability was 57% and overall survival rate was 67%. Local control was higher in those who received ≥ 54 Gy.

The RCR dose-fractionation guidelines (18) recommend a dose of 50.4 Gy in 28 fractions for patients treated with concurrent chemoradiotherapy.

In this model, the dose fractionation schedule, 50.4 Gy in 28 fractions, was used for patients with T1N0 and T2N0 anal cancer. For those with T1N0 disease, a sensitivity analysis was performed to assess the impact of the range of number of fractions (25 to 28 fractions) on the average number of fractions per anal cancer patient, and for those with T2N0 disease, a sensitivity analysis was performed to assess the impact of the range of number of fractions (25 to 32 fractions) on the average number of fractions per anal cancer patient. For

patients with T3, T4 or node positive disease, the dose fractionation schedule, 54 Gy in 30 fractions, was used. A sensitivity analysis was performed to assess the impact of the range of number of fractions (28 to 32 fractions) on the average number of fractions per anal cancer patient.

4. Metastatic anal cancer: radiotherapy dose

The NCCN guidelines (171) recommend radiotherapy for local control in patients with a symptomatic bulky primary. The NCI guidelines (174) recommend radiotherapy for patients with metastatic disease for palliation of symptoms from the primary lesion. The RCR dose-fractionation guidelines (18) state that there is inadequate evidence to recommend a dose fractionation schedule for patients who require palliative radiotherapy.

Dose fractionation schedules of 20 Gy in 5 fractions and 30 Gy in 10 fractions are commonly used in the palliative setting. The dose fractionation schedule, 20 Gy in 5 fractions, was used in this model. A sensitivity analysis was performed to assess the impact of the range of number of fractions (5 to 10 fractions) on the average number of fractions per anal cancer patient.

Sensitivity Analysis

The optimal number of fractions per anal cancer patient was 26.1.

A range of number of fractions was considered appropriate for radiotherapy for T1N0M0 anal cancer (25 to 28 fractions), T2N0M0 anal cancer (25 to 32 fractions), T3/4 or node positive anal cancer (28 to 32 fractions), and metastatic anal cancer (5 to 10 fractions).

To assess the impact of these uncertainties on the average number of radiotherapy fractions per anal cancer patient, a one-way sensitivity analysis was performed for these variables. The impact of these variables on the average number of radiotherapy fractions is illustrated by a tornado diagram (Fig. 1). The average number of radiotherapy fractions per anal cancer patient

varied between 25 and 27.1. The optimal fractionation tree for anal cancer is shown in Fig. 2.

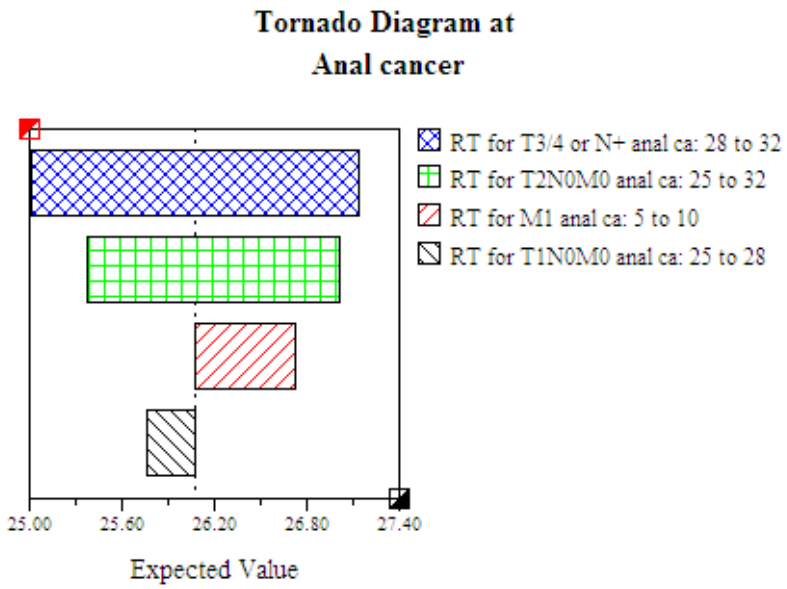

Figure 1. Anal cancer. Sensitivity analysis

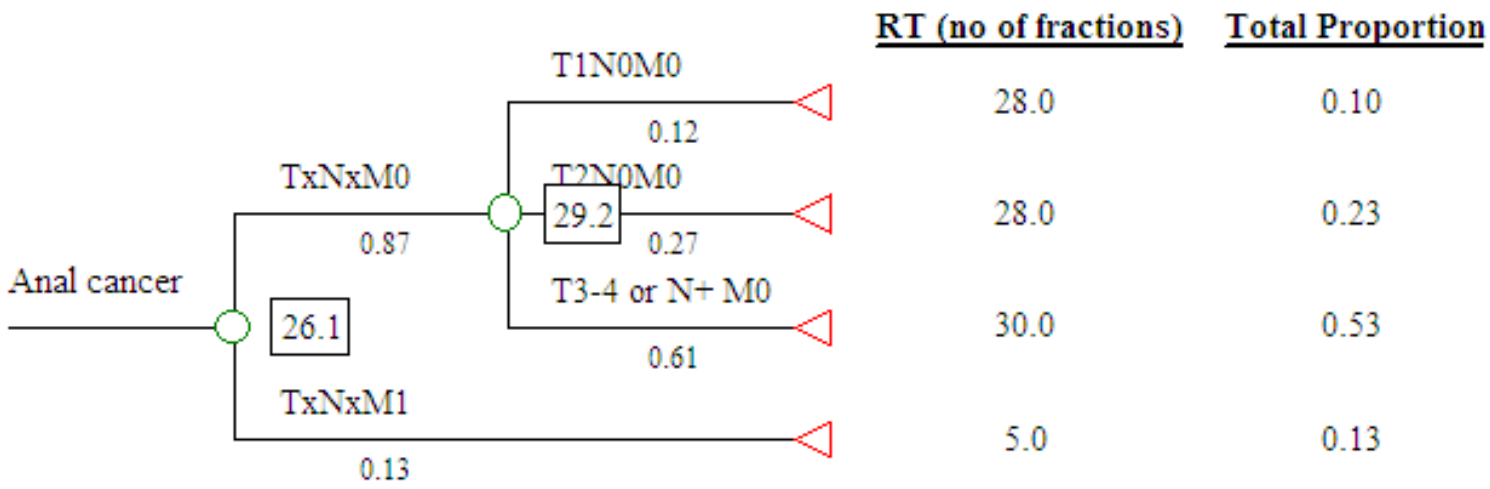

Figure 2. Anal cancer. Optimal fractionation tree

Chapter 5 Breast Cancer

Table 1. Breast cancer. Number of fractions of radiotherapy - Sources of evidence

Outcome no (utilisation model)	Clinical scenario (utilisation model)	Outcome no (fractionation model)	Clinical scenario (addition to fractionation model)	No of fractions	Range of no of fractions	Level of evidence	References	Notes	Proportion of all breast cancer patients
1	DCIS, breast-conserving surgery	1	–	25	–	II	Fisher et al (179) Bijker et al (180)	4	0.09
2	DCIS, mastectomy, local recurrence	2	Local recurrence excised	25	25–30	—	—	8	<0.01
		3	Local recurrence not excised	30	30–35	—	—	8	<0.01
4	T1-2 N0-1 M0, breast-conserving surgery	5	With tumour bed boost	19	19–33	II	Cancer Care Ontario guidelines on early breast cancer (181) Cancer Care Nova Scotia guidelines on breast radiotherapy after breast-conserving surgery (182)	2,3	0.29

Outcome no (utilisation model)	Clinical scenario (utilisation model)	Outcome no (fractionation model)	Clinical scenario (addition to fractionation model)	No of fractions	Range of no of fractions	Level of evidence	References	Notes	Proportion of all breast cancer patients
							BCCA guidelines (183) RCR guidelines (18) NICE guidelines (184) NCCN guidelines (185) ASTRO guidelines (186)		
		6	Without tumour bed boost	15	15−25	II	Cancer Care Ontario guidelines on early breast cancer (181) Cancer Care Nova Scotia guidelines on breast radiotherapy after breast-conserving surgery (182) BCCA guidelines (183) RCR guidelines (18) NICE guidelines (184) NCCN guidelines (185)	2	0.33

Outcome no (utilisation model)	Clinical scenario (utilisation model)	Outcome no (fractionation model)	Clinical scenario (addition to fractionation model)	No of fractions	Range of no of fractions	Level of evidence	References	Notes	Proportion of all breast cancer patients
							ASTRO guidelines (186)		
5	T1-2 N0-1 M0, mastectomy, 0-3 lymph nodes involved, local recurrence	7	Local recurrence excised	25	25−30	III	Kennedy and Abeloff (187) Schwaibold et al (188) Halverson et al (189)	7	0.01
		8	Local recurrence not excised	30	30−35	III	Kennedy and Abeloff (187) Schwaibold et al (188) Halverson et al (189)	7	<0.01
6	T1-2 N0-1 M0, mastectomy, 0-3 lymph nodes involved, distant recurrence with painful bone metastases	9	−	1	1−5	I	RCR guidelines (18)	10	0.01
7	T1-2 N0-1 M0,	10	−	5	5−10	II	RCR guidelines (18)	9	<0.01

Outcome no (utilisation model)	Clinical scenario (utilisation model)	Outcome no (fractionation model)	Clinical scenario (addition to fractionation model)	No of fractions	Range of no of fractions	Level of evidence	References	Notes	Proportion of all breast cancer patients
	mastectomy, 0-3 lymph nodes involved, distant recurrence with bone metastases, no pain, brain metastases								
9	T1-2 N0-1 M0, mastectomy, 0-3 lymph nodes involved, distant recurrence with brain metastases	12	−	5	5−10	II	RCR guidelines (18)	9	<0.01
12	T1-2 N0-1 M0, mastectomy, > 3 lymph nodes involved	15	−	15	15−33	IV	ASCO guidelines (190) NICE guidelines (184) NCCN guidelines (185)	5	0.03
13	T3-4 Nx M0 or Tx	16	−	15	15−33	IV	ASCO guidelines (190)	6	0.06

Outcome no (utilisation model)	Clinical scenario (utilisation model)	Outcome no (fractionation model)	Clinical scenario (addition to fractionation model)	No of fractions	Range of no of fractions	Level of evidence	References	Notes	Proportion of all breast cancer patients
	N2-3 M0, good/fair PS						Cancer Care Nova Scotia guidelines on locally advanced breast cancer (191) NICE guidelines (184) NCCN guidelines (185)		
15	Stage IV, no bone metastases, brain metastases	18	−	5	5−10	II	RCR guidelines (18)	9	<0.01
17	Stage IV, painful bone metastases	20	−	1	1−5	I	RCR guidelines (18)	10	0.01
18	Stage IV, bone metastases, no pain, brain metastases	21	−	5	5−10	II	RCR guidelines (18)	9	<0.01

Proportion of all breast cancer patients in whom radiotherapy is recommended	**0.83 (83%)**
Proportion of all cancer patients = 0.83 x 0.12 =	**0.0996 (9.96%)**
Average number of fractions per breast cancer patient	**14.4**
Average number of fractions per treatment course = 14.4/0.83 =	**17.3**

Key to abbreviations in breast cancer decision tree and tables

DCIS – Ductal carcinoma in situ

NBCC – National Breast Cancer Centre

NCI – National Cancer Institute

NCCN – National Comprehensive Cancer network

BCCA – British Columbia Cancer Agency

RCR – Royal College of Radiologists

NICE – National Institute for Health and Clinical Excellence

ASTRO – American Society for Radiation Oncology

ASCO – American Society of Clinical Oncology

PS – Performance status

Table 2. Breast Cancer. The incidence of attributes used to define number of fractions of radiotherapy

Key	Population or subpopulation of interest	Attribute	Proportion of populations with this attribute	Quality of Information	References	Notes
A	All registry cancers	Breast cancer	0.12	α	AIHW (16)	1
B	Breast cancer, T1-2 N0-1 M0, breast-conserving surgery	Tumour bed boost	0.74 0.61 0.43 0	θ	Owen et al (192) Bentzen et al (193) Bentzen et al (194) Whelan et al (195)	3
C	Breast cancer, T1-2 N0-1 M0, mastectomy, 0-3 nodes involved, local recurrence	Local recurrence excised	0.63 0.61 0.77	λ	Haylock et al (196) Schwaibold et al (188) Willner et al (197)	7

Breast Cancer

The optimal radiotherapy fractionation model for breast cancer was based on the optimal radiotherapy utilisation model for breast cancer (1, 198).

Treatment Guidelines

The following clinical practice guidelines for the management of breast cancer were identified:

- NHMRC guidelines for the management of early breast cancer second edition (2001) (199)
- NHMRC guidelines for the management of advanced breast cancer (2001) (200)
- National Breast Cancer Centre (NBCC) guidelines on the clinical management of ductal carcinoma in situ, lobular carcinoma in situ and atypical hyperplasia of the breast (2003) (201)
- NCCN guidelines on breast cancer (version 2.2010) (185)
- NCI PDQ guidelines on breast cancer (2010) (202)
- American Society of Clinical Oncology (ASCO) guidelines on post-mastectomy radiotherapy (2001) (190)
- American Society for Radiation Oncology (ASTRO) evidence-based guideline on fractionation for whole breast irradiation (2010) (186)
- Cancer Care Ontario guidelines on breast irradiation in women with early stage invasive breast cancer following breast conserving surgery (2002) (181)
- Cancer Care Ontario guidelines on management of ductal carcinoma in situ of the breast (2006) (203)
- BC Cancer Agency breast cancer management guidelines (2005) (183)
- Clinical practice guidelines for the care and treatment of breast cancer: 6. Breast radiotherapy after breast-conserving surgery, endorsed by Cancer Care Nova Scotia (2003) (182)

- Clinical practice guidelines for the care and treatment of breast cancer: 15. Treatment for women with stage III or locally advanced breast cancer, endorsed by Cancer Care Nova Scotia (2004) (191)
- Clinical practice guidelines for the care and treatment of breast cancer: 16. Loco-regional post-mastectomy radiotherapy, endorsed by Cancer Care Nova Scotia (2004) (204)
- RCR radiotherapy dose-fractionation guidelines (2006) (18)
- National Institute for Health and Clinical Excellence (NICE) guidelines on early and locally advanced breast cancer: diagnosis and treatment (2009) (184)

Explanatory Notes for Tables 1 and 2

1. Incidence of breast cancer

Breast cancer constituted 12.2% of all cancers occurring in Australia in 2005 (16).

2. Adjuvant radiotherapy to the whole breast after breast-conserving surgery: radiotherapy dose

No specific dose fractionation schedules are recommended in the Australian guidelines, but various dose fractionation schedules are recommended in the other clinical guidelines. These include the Cancer Care Ontario guidelines on breast irradiation in women with early stage invasive breast cancer following breast-conserving surgery (2002) (181), the guidelines on breast radiotherapy after breast-conserving surgery endorsed by Cancer Care Nova Scotia (2003) (182), the BC Cancer Agency guidelines on breast cancer (2005) (183), and the RCR radiotherapy dose-fractionation guidelines (2006) (18).

The Cancer Care Ontario guidelines (181), last updated in 2002, state that the optimal fractionation schedule for breast irradiation has not been established. The guidelines suggest, outside of a clinical trial, the following dose fractionation schedules: 50 Gy in 25 fractions or 40 Gy in 16 fractions to the

whole breast. The Cancer Care Nova Scotia Breast Cancer Site Team endorses the Health Canada's Canadian Breast Cancer Initiative clinical practice guidelines for the care and treatment of breast cancer. The guidelines on breast radiotherapy after breast-conserving surgery (182), last updated in 2003, state that a number of different fractionation schedules for breast irradiation have been used. The guidelines state that the most common fractionation schedule used in Canada has been 50 Gy in 25 fractions, but data have demonstrated that the fractionation schedule, 42.5 Gy in 16 fractions, is of equivalent efficacy and toxicity as this more traditional schedule. The BC Cancer Agency guidelines on breast cancer (2005) (183) state that radiotherapy after breast-conserving surgery is given over 3 to 6 weeks. The guidelines also state that experience with a 3 week course of radiotherapy over the past decade has shown that patients with large breasts and those with significant post-operative induration, oedema, erythema, haematoma or infection have an inferior cosmetic outcome; and that these women will be offered extended fractionation with smaller daily doses over five to six weeks, in an effort to reduce normal tissue side-effects from the radiation. No specific dose fractionation schedules are recommended. The RCR guidelines (18), last updated in 2006, recommend the following dose fractionation schedules: 50 Gy in 25 fractions, 40 Gy in 15 fractions and 42.5 Gy in 16 fractions, reflecting historical variation in practice in the UK.

In the past few years, results of four randomised clinical trials conducted in Canada and the UK comparing conventional fractionation with hypofractionation in whole breast radiotherapy have been published (192-195, 205-206). The more recently published clinical guidelines including the NICE guidelines on early and locally advanced breast cancer (2009) (184), the NCCN guidelines on breast cancer (version 2.2010) (185) and the ASTRO evidence-based guideline on fractionation for whole breast irradiation (2010) (186) have incorporated reference to these results in their recommendations on the number of fractions for adjuvant radiotherapy for breast cancer.

The NICE guidelines (184) recommend the dose fractionation schedule, 40 Gy in 15 fractions, as standard practice for patients with early invasive breast

cancer after breast-conserving surgery. The NCCN guidelines (185) recommend a dose of 45 to 50 Gy in 1.8 to 2 Gy per fraction (25 fractions), or 42.5 Gy in 2.66 Gy per fraction (16 fractions), for whole breast radiotherapy.

The ASTRO guidelines (186) state that conventionally fractionated whole breast radiotherapy and hypofractionated whole breast radiotherapy are equally effective for in-breast tumour control and comparable in long-term side-effects for patients meeting all of the following criteria: i) patient is 50 years or older at diagnosis; ii) pathological stage is T1-2N0 and patient has been treated with breast-conserving surgery; iii) patient has not been treated with systemic chemotherapy; iv) within the breast along the central axis, the minimum dose is no less than 93% and maximum dose is no greater than 107% of the prescription dose. The guidelines state that “for other patients, the task force could not reach agreement either for or against the use of hypofractionated whole breast irradiation, which nevertheless should not be interpreted as a contraindication to its use”. The authors commented that these guidelines should not be interpreted to prohibit or oppose the use of hypofractionated whole breast radiotherapy for patients not meeting all the criteria but rather that the evidence was not sufficient to reach consensus for such patients. The guidelines also mention that many task force members use hypofractionated radiotherapy for many such patients, although their own patterns of practice often differ substantially from one another. The guidelines emphasise that while the evidence reviewed and expert opinion generated in the development of the guidelines support the non-inferiority of hypofractionated radiotherapy compared to conventionally fractionated radiotherapy for selected patients with early stage breast cancer, the largest body of data demonstrating the safety, effectiveness and long-term toxicities of breast-conserving therapy comes from studies using conventionally fractionated radiotherapy. Therefore, for patients who do not meet the above criteria, as well as for those patients who do meet these criteria, patients and their physicians may prefer conventionally fractionated radiotherapy on the basis of the abundance of long-term data. The guidelines recommend the dose fractionation schedule, 42.5 Gy in 16 fractions, when hypofractionated radiotherapy is planned for patients not receiving a radiation boost. The guidelines task force could not agree on the

appropriateness of a tumour bed boost in patients treated with hypofractionated radiotherapy.

The recommended dose fractionation schedules for whole breast radiotherapy are summarised in Table 3. The variation in recommendations and broadness of the recommended selection criteria for individual patients is problematic when designing a decision tree for fractionation. All guidelines, except the NICE guidelines, recommend both conventionally fractionated and hypofractionated radiotherapy. The NICE guidelines only recommend hypofractionated radiotherapy. For the purposes of the model, the shortest dose fractionation schedule, 40 Gy in 15 fractions, was used for patients recommended to have adjuvant radiotherapy to the whole breast. A sensitivity analysis was performed to assess the impact of the range of number of fractions (15 to 25 fractions) on the average number of fractions per breast cancer patient.

Table 3. Adjuvant radiotherapy to the whole breast after breast-conserving surgery: dose fractionation schedules recommended in the guidelines

Guidelines	Radiotherapy dose
Cancer Care Ontario guidelines (181)	50 Gy in 25 fractions 40 Gy in 16 fractions
Cancer Care Nova Scotia guidelines (182)	50 Gy in 25 fractions 42.5 Gy in 16 fractions
RCR guidelines (18)	50 Gy in 25 fractions 42.5 Gy in 16 fractions 40 Gy in 15 fractions
NICE guidelines (184)	40 Gy in 15 fractions
NCCN guidelines (185)	45-50 Gy in 25 fractions 42.5 Gy in 16 fractions
ASTRO guidelines (186)	50 Gy in 25 fractions 42.5 Gy in 16 fractions

3. Tumour bed boost radiotherapy: indications and radiotherapy dose

The Cancer Care Ontario guidelines (181) state that the role of boost irradiation is unclear. Outside of a clinical trial, the guidelines recommend the dose fractionation schedule of 12.5 Gy in 5 fractions. The guidelines endorsed by Cancer Care Nova Scotia (182) recommend that oncologists may wish to consider the use of a boost (10 to 16 Gy in 4 to 8 fractions) in women at increased risk of local recurrence following breast irradiation alone, e.g., those younger than 40 years of age, or those with positive or close resection margins. The BC Cancer Agency guidelines (183) state that if the resection margin is < 2 mm and re-excision is declined or inappropriate, a boost to the tumour bed is recommended. No specific dose fractionation schedules are recommended.

The RCR guidelines (18) state that three randomised trials evaluating a tumour bed boost after whole breast radiotherapy have shown a small but statistically significant benefit to the delivery of a boost in patients with invasive tumours (207-209), and that the European Organisation for Research and Treatment of Cancer (EORTC) boost trial reported the greatest absolute benefit in the subgroup of women < 50 years of age given a boost of 16 Gy in 8 fractions after 50 Gy in 25 fractions to the whole breast (207). The guidelines state that a range of fractionation regimens is in use in the UK and have not made recommendations on a particular dose fractionation schedule.

The NICE guidelines (184) recommend that an external beam boost to the site of local excision should be offered to patients with early invasive breast cancer and a high risk of local recurrence, following breast-conserving surgery with clear margins and whole breast radiotherapy. The specific indications are not discussed, and no specific dose fractionation schedules are recommended in the guidelines. The NCCN guidelines (185) state that a boost to the tumour bed is recommended in patients at higher risk of local failure (age < 50, positive axillary nodes, lymphovascular invasion, or close margins), and that typical doses are 10 to 16 Gy in 2 Gy per fraction (5 to 8 fractions).

The ASTRO guidelines (186) do not specifically discuss the indications for breast boost radiotherapy after whole breast radiotherapy. The guidelines state

that the task force could not agree on the appropriateness of a tumour bed boost in patients treated with hypofractionated radiotherapy to the whole breast.

These guideline recommendations are summarised in table 4.

Table 4. Tumour bed boost radiotherapy: indications and dose fractionation schedules recommended in the guidelines

Guidelines	Indications	Radiotherapy dose
Cancer Care Ontario guidelines (181)	Role unclear	12.5 Gy in 5 fractions
Cancer Care Nova Scotia guidelines (182)	Increased risk of local recurrence, e.g., age < 40, positive or close resection margins	10-16 Gy in 4-8 fractions
BC Cancer Agency guidelines (183)	Close resection margins	No specific schedule recommended
RCR guidelines (18)	Not specifically discussed	No specific schedule recommended
NICE guidelines (184)	High risk of local recurrence —indications not specifically discussed	No specific schedule recommended
NCCN guidelines (185)	Higher risk of local recurrence, e.g., age < 50, positive axillary nodes, lymphovascular invasion, close margins	10-16 Gy in 5-8 fractions
ASTRO guidelines (186)	Indications not specifically discussed	No specific schedule recommended

There is no consensus in the guidelines regarding the indications for when a tumour bed boost should be recommended and nor for the recommended dose. This variation in clinical practice is reflected in the variable proportions of patients who received a tumour bed boost in the recently published randomised controlled trials comparing conventional fractionation with hypofractionation in whole breast radiotherapy. Owen et al (192) reported on 1410 patients with invasive breast cancer who were randomised to receive 50 Gy in 25 fractions, 39 Gy in 13 fractions or 42.9 Gy in 13 fractions to the whole breast between 1986 and 1998. Patients with a complete microscopic resection who were judged eligible by the clinician and gave consent were further randomly allocated to receive a tumour bed boost or no boost. This sub-randomisation was closed in July 1997, and all patients were offered an elective boost thereafter. In total, 1047 patients (74%) received a tumour bed boost. The dose was 14 Gy in 7 fractions. In the UK Standardisation of Breast Radiotherapy (START) Trial A (193), 1900 patients received whole breast radiotherapy after breast-conserving surgery between 1998 and 2002. Departments were required to have a protocol specifying whether patients who had breast-conserving surgery would receive a boost to the tumour bed, and to use an electron field of appropriate energy to deliver 10 Gy in 5 fractions after initial radiotherapy. Of the 1900 patients, 1152 (61%) received a tumour bed boost. In the START Trial B (194) in which 2038 patients received whole breast radiotherapy after breast-conserving surgery between 1999 and 2001, 868 patients (43%) received a tumour bed boost. Again, departments were required to have a protocol specifying whether patients who had breast-conserving surgery would receive a boost to the tumour bed, and to use an electron field of appropriate energy to deliver 10 Gy in 5 fractions after initial radiotherapy. Whelan et al (195) recently reported the 10-year results of a study in which 1234 breast cancer patients were randomised to receive whole breast radiotherapy 50 Gy in 25 fractions or 42.5 Gy in 16 fractions after breast-conserving surgery. In contrast to the above-mentioned studies, boost radiotherapy to the tumour bed was not used.

Summating these four large randomised studies, 3067 of 6588 patients (47%) received a tumour bed boost. These data were used in this model to determine the proportion of patients receiving a tumour bed boost after whole breast

radiotherapy. Patients who received whole breast radiotherapy after breast-conserving surgery were divided into two branches: those who received a tumour bed boost (0.47) and those who did not (0.53). This proposed method of incorporation of boost into the model has the limitation that we are making an assumption that all boosts are being applied to patients where a boost dose is indicated. As there is a wide variation in the delivery of a tumour bed boost in these studies without any clear indication of who would benefit from a boost, which likely reflects differences in patterns of practice, a sensitivity analysis was performed to assess the impact of different rates of tumour bed boost delivery (47% to 100%) on the average number of fractions per breast cancer patient.

A range of number of fractions (4 to 8 fractions) is also recommended in the guidelines for tumour bed boost radiotherapy. In the model, the shortest dose fractionation schedule, 40 Gy in 15 fractions followed by 10 Gy in 4 fractions (total 19 fractions), was used for patients recommended to have whole breast and tumour bed boost radiotherapy. Based on guideline recommendations, the longest dose fractionation schedule comprises of whole breast radiotherapy, 50 Gy in 25 fractions, followed by a tumour bed boost of 16 Gy in 8 fractions (total 33 fractions). A sensitivity analysis was performed to assess the impact of the range of number of fractions (19 to 33 fractions) on the average number of fractions per breast cancer patient.

4. Adjuvant radiotherapy after breast-conserving surgery for ductal carcinoma in situ (DCIS): radiotherapy dose

No specific dose fractionation schedules are recommended in the guidelines. The NBCC guidelines on the clinical management of DCIS, lobular carcinoma in situ and atypical hyperplasia of the breast (201), the Cancer Care Ontario guidelines on management of DCIS of the breast (203), the NCI guidelines on breast cancer (202), the NCCN guidelines on breast cancer (185) and the BC Cancer Agency guidelines on breast cancer (183) make reference to the two randomised trials which have shown lower recurrence rates in women with DCIS treated with breast-conserving surgery and adjuvant radiotherapy compared with those treated by breast-conserving surgery alone (179-180). In

both the National Surgical Adjuvant Breast and Bowel Project (NSABP) B-17 and EORTC 10853 studies, the dose fractionation schedule of adjuvant radiotherapy was 50 Gy in 25 fractions. In the NSABP B-17 study, with median follow-up of 8 years, adjuvant radiotherapy reduced the incidence of recurrent non-invasive ipsilateral breast tumours from 13.4% to 8.2%, and of recurrent invasive ipsilateral breast tumours from 13.4% to 3.9% (179). In the EORTC 10853 study, with median follow-up of 10.5 years, adjuvant radiotherapy reduced the risk of DCIS and invasive local recurrence by 48% and 42% respectively (180). There are currently no published randomised studies assessing outcome for hypofractionated regimens and for inclusion of boost, although studies are currently in progress to address these questions.

In this model, the dose fractionation schedule, 50 Gy in 25 fractions, was used based on these two randomised studies.

5. Post-mastectomy radiotherapy: radiotherapy dose

The ASCO guidelines on post-mastectomy radiotherapy (190), published in 2001, state that there is insufficient evidence to recommend or suggest total dose and fraction size of chest wall irradiation. There is no agreement as to what an “adequate” or “optimal” radiotherapy regimen for post-mastectomy radiotherapy is. The guidelines state that different centres throughout the world use very different fractionation schedules and total doses, and that most institutions in the USA treat the chest wall to total doses of approximately 50 Gy in 1.8 to 2 Gy daily fractions. There are no data on whether giving doses to the entire chest wall in excess of 50 Gy are of additional benefit. On the other hand, institutions in Europe and Canada have often used shorter fractionation schedules. The guidelines state that it is not clear whether one fractionation schedule has any advantages over another. There are also few data on whether giving a boost dose to the mastectomy scar is of value in reducing the risk of local failure, compared with treating the entire chest wall uniformly without a boost (210-211).

The clinical practice guidelines endorsed by the Cancer Care Nova Scotia Breast Cancer Site Team on the treatment for women with stage III or locally advanced breast cancer (191) recommend a dose of 50 Gy in 25 fractions or equivalent for patients with operable stage IIIA disease post-mastectomy.

The more recently published NICE guidelines (184) recommend the dose fractionation schedule, 40 Gy in 15 fractions, as standard practice for patients with early invasive breast cancer after mastectomy. The NCCN guidelines (185), updated in 2010, recommend a dose of 50 Gy in 1.8 to 2 Gy per fraction, with or without a scar boost in 2 Gy per fraction to a total dose of approximately 60 Gy (30 to 33 fractions).

In the model, the shortest dose fractionation schedule, 40 Gy in 15 fractions, was used. To take into consideration the variation in dose fractionation schedules recommended in the clinical guidelines, a sensitivity analysis was performed to assess the impact of the range of number of fractions (15 to 33 fractions) on the average number of fractions per breast cancer patient.

6. Stage T3-4NxM0 or TxN2-3M0 breast cancer: radiotherapy dose

The clinical practice guidelines endorsed by the Cancer Care Nova Scotia Breast Cancer Site Team on the treatment for women with stage III or locally advanced breast cancer (191) recommend mastectomy and locoregional radiotherapy in patients with operable disease. For patients with inoperable tumours, these guidelines state that patients whose disease remains inoperable following chemotherapy should receive locoregional radiotherapy with subsequent surgery, if feasible. The guidelines state that for patients treated primarily with radiotherapy, doses of 60 to 66 Gy in 30 to 33 fractions or equivalent should be given to areas of bulk disease.

The NHMRC guidelines for the management of advanced breast cancer (200) state that for most locally advanced carcinomas, conventional fractionation of 2 Gy per fraction is considered adequate although no dose range is provided.

In the model, the dose fractionation schedule, 40 Gy in 15 fractions, was used (see note 5). A sensitivity analysis was performed to assess the impact of the range of number of fractions (15 to 33 fractions) on the average number of fractions per breast cancer patient, taking into consideration the range of number of fractions recommended in the guidelines for post-mastectomy radiotherapy (see note 5) and for radiotherapy for inoperable locally advanced breast cancer.

7. T1-2N0-1 breast cancer, local recurrence after initial mastectomy: radiotherapy dose

The NHMRC guidelines for the management of advanced breast cancer (200) recommend complete excision of loco-regional recurrent macroscopic disease, which allows more effective radiotherapy and improves local control. If the local recurrence is too extensive for excision with primary closure, radiotherapy should be used as an alternative to surgery, as high rates of complete response can be achieved with radiotherapy alone (212).

Proportion of patients who undergo excision

Schwaibold et al (188) reported on a retrospective study of 128 patients with locoregional recurrence after mastectomy treated with radiotherapy at the University of Pennsylvania and the Fox Chase Cancer Centre, Philadelphia. Recurrence was confined to a single site in 108 patients and multiple sites in 20. Surgical treatment for recurrence prior to radiotherapy consisted of excision of all gross disease in 78 patients (61%). Willner at al (197) retrospectively reviewed 145 patients with locoregional recurrence of breast cancer after mastectomy treated at the Department of Radiation Oncology at the University of Würzburg, Germany. Of these, 111 patients (77%) underwent surgical excision of the recurrence. Haylock et al (196) reported on a prospective, non-randomised trial of 120 patients with locoregional recurrence after mastectomy. Excision of the recurrence was performed if feasible. Seventy-six patients (63%) had complete pathological excision of the recurrence. These data were used in the model to determine the proportion of patients with locoregional recurrence

after mastectomy who underwent excision of the recurrence. Patients with locoregional recurrence after mastectomy were divided into two branches: those who underwent surgical excision of the recurrence and those who did not. The excision rate of 63% reported by Haylock et al (196) was used as this was a prospective trial while the other two studies were retrospective. A sensitivity analysis was performed to assess the impact of the range of rate of excision (61% to 77%) on the average number of fractions per breast cancer patient.

Dose-fractionation

No specific dose fractionation schedules are recommended in the guidelines. The NHMRC guidelines (200) recommend that radiotherapy should be administered to the entire chest wall and draining nodal areas, making reference to the study reported by Kennedy and Abeloff (187). They suggested 50 Gy as the minimum dose after excision, and higher doses for gross residual disease. Schwaibold et al (188) reported a locoregional control rate of 55% in patients receiving 45 to 50 Gy and 43% in those receiving > 50 Gy, after excision of local recurrence. In patients with gross disease measuring ≤ 4 cm, the local control rate was 57% in those who received ≥ 60 Gy, compared to 15% in those who received < 60 Gy. They recommended 60 Gy as the minimum dose for lesions up to 4 cm.

Halverson et al (189) retrospectively reviewed 224 patients with locoregional recurrence following mastectomy treated with radiotherapy in the Radiation Oncology Center of Mallinckrodt Institute of Radiology and affiliated hospitals, St Louis, Missouri. Their results showed that subclinical disease was usually controlled with 50 to 60 Gy. For tumours less than 3 cm, 100% were controlled at doses ≥ 60 Gy. The authors recommended at least 50 Gy for completely excised recurrences and at least 60 Gy for incompletely excised, small (< 3 cm) recurrences. For larger lesions, no dose response could be established, doses in the range of 60 to 70 Gy resulted in 50% control rate. They recommended 65 to 70 Gy and 60 to 65 Gy to unfavourable chest wall and nodal recurrences respectively. .

Summarising the above recommendations, the dose range of 50 to 60 Gy is recommended for patients with locoregional recurrence treated with surgical excision and radiotherapy. In the model, the dose fractionation schedule, 50 Gy in 25 fractions, was used. A sensitivity analysis was performed to assess the impact of the range of number of fractions (25 to 30 fractions) on the average number of fractions per breast cancer patient.

For patients with gross disease, the dose range of 60 to 70 Gy is recommended. In the model, the dose fractionation schedule, 60 Gy in 30 fractions, was used. A sensitivity analysis was performed to assess the impact of the range of number of fractions (30 to 35 fractions) on the average number of fractions per breast cancer patient.

8. DCIS, local recurrence after initial mastectomy: radiotherapy dose

The rate of surgical excision of local recurrence after initial mastectomy for DCIS could not be determined despite an extensive literature search. For the purposes of this model, the same rate of surgical excision as that of local recurrence after mastectomy for early invasive breast cancer, 63% (range 61% to 77%), was used for patients with local recurrence after initial mastectomy for DCIS (see note 7).

No specific dose fractionation schedules are recommended in the guidelines. In the model, the same dose fractionation schedules recommended for local recurrence after mastectomy for early breast cancer were used for these patients (see note 7).

9. Breast cancer: brain metastases

The dose fractionation schedule, 20 Gy in 5 fractions, was used in this model. A sensitivity analysis was conducted to assess the impact of the range of number of fractions (5 to 10 fractions) on the average number of fractions per breast cancer patient (see chapter 18).

10. Breast cancer: bone metastases

A single fraction of 8 Gy was used in this model. A sensitivity analysis was performed to assess the impact of the range of number of fractions (1 to 5 fractions) on the average number of fractions per breast cancer patient (see chapter 18).

Sensitivity Analysis

The optimal number of fractions per breast cancer patient was 14.4.

As discussed by Delaney et al (1, 198), there were several data elements where there was uncertainty. These included the proportion of node positive patients in whom post-mastectomy radiotherapy is recommended (0.18 to 0.34), the proportion of patients with distant relapse who have bone metastases (0.42 to 0.71) and the proportion of patients with bone metastases who are symptomatic (0.80 to 0.95). In addition, there was uncertainty regarding the proportion of patients who receive tumour bed boost after breast-conserving surgery and whole breast radiotherapy for early invasive breast cancer (0.47 to 1.0), and the proportion of patients with local recurrence after initial mastectomy who undergo surgical excision of the recurrence (0.61 to 0.77).

There was also a range of number of fractions considered appropriate for adjuvant radiotherapy to the whole breast after breast-conserving surgery for early invasive breast cancer (15 to 25 fractions), adjuvant radiotherapy to the whole breast with a tumour bed boost (19 to 33 fractions), post-mastectomy radiotherapy (15 to 33 fractions), radiotherapy for locoregionally advanced breast cancer (15 to 33 fractions), radiotherapy for excised local recurrence after initial mastectomy (25 to 30 fractions), radiotherapy for gross local recurrence after initial mastectomy (30 to 35 fractions), radiotherapy for brain metastases (5 to 10 fractions) and for bone metastases (1 to 5 fractions).

To assess the impact of these uncertainties on the average number of radiotherapy fractions in breast cancer patients, a one-way sensitivity analysis

was performed for each of these variables. The impact of these variables on the average number of radiotherapy fractions is illustrated by a tornado diagram (Fig. 1). The average number of radiotherapy fractions per breast cancer patient varied between 14.4 and 18.5. This range of number of fractions was primarily due to the range of number of fractions considered appropriate for adjuvant radiotherapy to the whole breast (+/- tumour bed boost) after breast-conserving surgery for early breast cancer. The other uncertainties resulted in a small range in the number of fractions per breast cancer patient (14.4 to 15.7 fractions). The optimal fractionation tree for breast cancer is shown in Figs. 2-4.

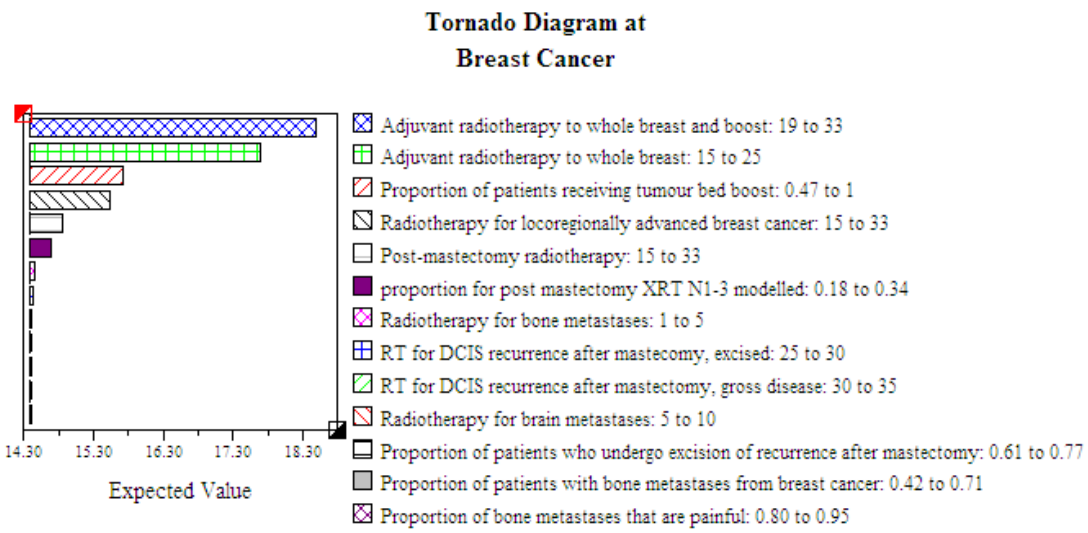

Figure 1. Breast cancer. Sensitivity analysis

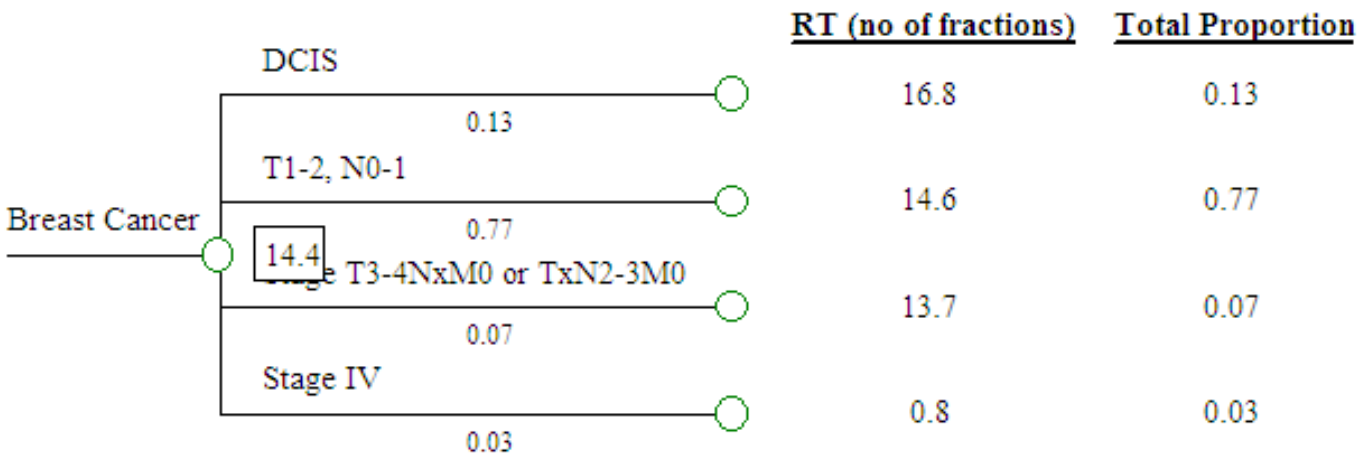

Figure 2. Breast cancer. Optimal fractionation tree

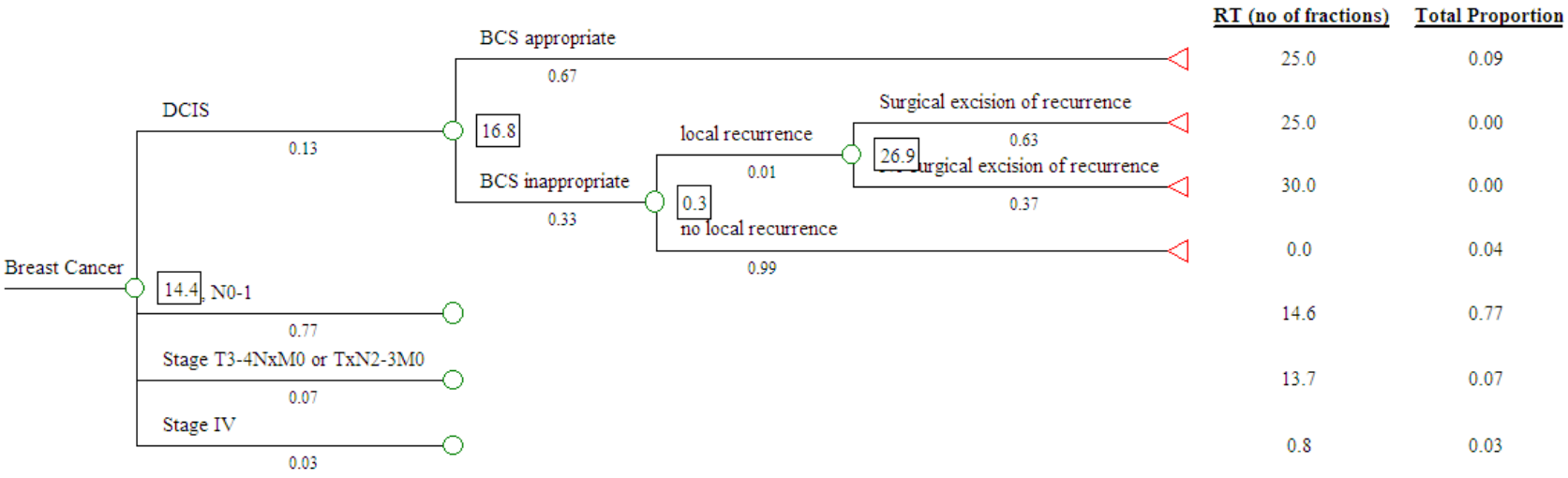

Figure 3. Breast cancer (DCIS). Optimal fractionation tree

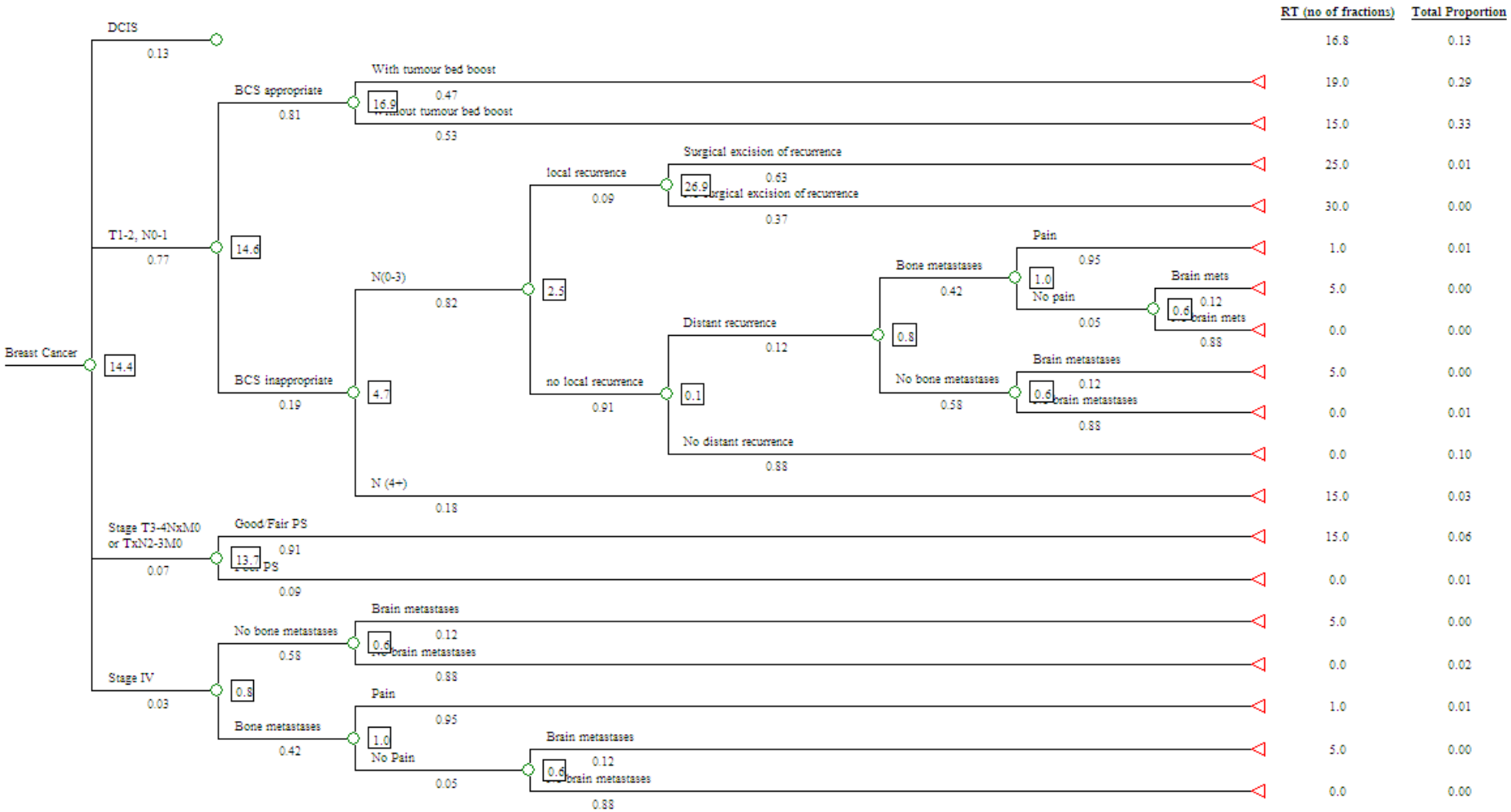

Figure 4. Invasive breast cancer. Optimal fractionation tree

Chapter 6 Melanoma

Table 1. Melanoma. Number of fractions of radiotherapy – Sources of evidence

Outcome no (utilisation model)	Clinical scenario (utilisation model)	Outcome no (fractionation model)	Clinical scenario (addition to fractionation model)	No of fractions	Range of no of fractions	Level of evidence	References	Notes	Proportion of all melanoma patients
1	Mucosal melanoma	2	Involved/close margins	30	−	III	Owens et al (213) Temam et al (214) Moreno et al (215)	2	<0.01
3	Cutaneous, stage I-III, desmoplastic	4	−	20	5−30	IV	Chen et al (216) Foote et al (217)	6	0.02
5	Cutaneous, stage I-III, non-desmoplastic, head and neck, pT1-3, nodal/systemic recurrence	6	Nodal recurrence	20	5−30	−	−	8	<0.01
		7	Brain metastases	5	5−10	II	RCR guidelines (18)	10	<0.01
		8	Bone metastases	1	1−5	I	RCR guidelines (18)	11	<0.01
7	Cutaneous, stage I-III, non-desmoplastic, head and neck, pT4	10	−	20	5−30	III	Chang et al (218) Ang et al (219)	4, 5	0.02
9	Cutaneous, stage I-III, non-desmoplastic,	12	Nodal recurrence	20	5−30	−	−	8	<0.01
		13	Brain metastases	5	5−10	II	RCR guidelines (18)	10	<0.01

Outcome no (utilisation model)	Clinical scenario (utilisation model)	Outcome no (fractionation model)	Clinical scenario (addition to fractionation model)	No of fractions	Range of no of fractions	Level of evidence	References	Notes	Proportion of all melanoma patients
	Not head and neck, node negative, nodal/systemic recurrence	14	Bone metastases	1	1−5	I	RCR guidelines (18)	11	<0.01
12	Cutaneous, stage I-III, non-desmoplastic, not head and neck, node positive, 1-3 nodes involved nodal/systemic recurrence	17	Nodal recurrence	20	5−30	−	−	8	0.06
		18	Brain metastases	5	5−10	II	RCR guidelines (18)	10	0.01
		19	Bone metastases	1	1−5	I	RCR guidelines (18)	11	<0.01
14	Cutaneous, stage I-III, non-desmoplastic, not head and neck, node positive, ≥ 4 nodes involved	21	−	20	5−30	II	NCCN guidelines (220)	3	0.08
15	Cutaneous, stage IV, symptomatic	22	Nodal metastases	15	15−20	III	NHMRC guidelines (221)	9	<0.01

Outcome no (utilisation model)	Clinical scenario (utilisation model)	Outcome no (fractionation model)	Clinical scenario (addition to fractionation model)	No of fractions	Range of no of fractions	Level of evidence	References	Notes	Proportion of all melanoma patients
	brain/bone/ node metastases	23	Brain metastases	5	5−10	II	RCR guidelines (18)	10	<0.01
		24	Bone metastases	1	1−5	I	RCR guidelines (18)	11	<0.01

Proportion of all melanoma patients in whom radiotherapy is recommended	**0.22 (22%)**
Proportion of all cancer patients = 0.22 x 0.11 =	**0.024 (2.4%)**
Average number of fractions per melanoma patient	**4.2**
Average number of fractions per treatment course = 4.2/0.22 =	**19.1**

Key to abbreviations in melanoma decision tree and tables

RCR – Royal College of Radiologists

NCCN – National Comprehensive Cancer Network

NHMRC – National Health and Medical Research Council

Table 2. Melanoma. The incidence of attributes used to define number of radiotherapy fractions

Key	Population or subpopulation of interest	Attribute	Proportion of populations with this attribute	Quality of Information	References	Notes
A	All registry cancers	Melanoma	0.11	α	AIHW (16)	1
B	Mucosal melanoma	Involved/close margins	0.17	λ	Pooled data- see note 2	2
C	Cutaneous melanoma, stage I-III, non-desmoplastic, head and neck, pT1-3, nodal/systemic recurrence, nodal/brain/bone recurrence	Nodal recurrence	0.90	δ	Cohn-Cedermark et al (222)	7
D	Cutaneous melanoma, stage I-III, non-desmoplastic, head and neck, pT1-3, nodal/systemic recurrence, nodal/brain/bone recurrence	Brain metastases	0.08	δ	Cohn-Cedermark et al (222)	7
E	Cutaneous melanoma, stage I-III, non-desmoplastic, head and neck, pT1-3, nodal/systemic recurrence, nodal/brain/bone recurrence	Bone metastases	0.02	δ	Cohn-Cedermark et al (222)	7

Key	Population or subpopulation of interest	Attribute	Proportion of populations with this attribute	Quality of Information	References	Notes
F	Cutaneous melanoma, stage I-III, non-desmoplastic, non-head and neck, node negative, nodal/systemic recurrence, nodal/brain/bone recurrence	Nodal recurrence	0.90	δ	Cohn-Cedermark et al (222)	7
G	Cutaneous melanoma, stage I-III, non-desmoplastic, non-head and neck, node negative, nodal/systemic recurrence, nodal/brain/bone recurrence	Brain metastases	0.08	δ	Cohn-Cedermark et al (222)	7
H	Cutaneous melanoma, stage I-III, non-desmoplastic, non-head and neck, node negative, nodal/systemic recurrence, nodal/brain/bone recurrence	Bone metastases	0.02	δ	Cohn-Cedermark et al (222)	7
I	Cutaneous melanoma, stage I-III, non-desmoplastic, non-head and	Nodal recurrence	0.90	δ	Cohn-Cedermark et al (222)	7

Key	Population or subpopulation of interest	Attribute	Proportion of populations with this attribute	Quality of Information	References	Notes
	neck, node positive, 1-3 nodes involved, nodal/systemic recurrence, nodal/brain/bone recurrence					
J	Cutaneous melanoma, stage I-III, non-desmoplastic, non-head and neck, node positive, 1-3 nodes involved, nodal/systemic recurrence, nodal/brain/bone recurrence	Brain metastases	0.08	δ	Cohn-Cedermark et al (222)	7
K	Cutaneous melanoma, stage I-III, non-desmoplastic, non-head and neck, node positive, 1-3 nodes involved, nodal/systemic recurrence, nodal/brain/bone recurrence	Bone metastases	0.02	δ	Cohn-Cedermark et al (222)	7
L	Cutaneous melanoma, stage IV, symptomatic brain/bone/node metastases	Nodal metastases	0.90	δ	Cohn-Cedermark et al (222)	7
M	Cutaneous melanoma, stage IV,	Brain metastases	0.08	δ	Cohn-Cedermark et al (222)	7

Key	Population or subpopulation of interest	Attribute	Proportion of populations with this attribute	Quality of Information	References	Notes
	symptomatic brain/bone/node metastases					
N	Cutaneous melanoma, stage IV, symptomatic brain/bone/node metastases	Bone metastases	0.02	δ	Cohn-Cedermark et al (222)	7

Melanoma

The optimal radiotherapy fractionation model for melanoma was based on the optimal radiotherapy utilisation model for melanoma (18-19).

Treatment Guidelines

The following clinical practice guidelines for the management of melanoma were identified:

- NHMRC clinical practice guidelines for the management of melanoma in Australia and New Zealand (2008) (221)
- NCCN clinical practice guidelines on melanoma (version 1.2011) (220)
- NCI PDQ guidelines on melanoma (2010) (223)
- BC Cancer Agency skin cancer management guidelines (2008) (224)

Explanatory Notes for Tables 1 and 2

1. Incidence of melanoma

Melanoma constituted 10.6% of all cancers occurring in Australia in 2005 (16).

2. Adjuvant radiotherapy for mucosal melanoma

In the optimal radiotherapy utilisation model (1, 225), post-operative radiotherapy was recommended based on the recommendation of the 1999 NHMRC guidelines on management of cutaneous melanoma (226) that post-operative radiotherapy should be considered as mucosal melanomas usually present late and are usually unresectable.

The NHMRC guidelines have been updated in 2008 (221) and recommend that adjuvant radiotherapy should be considered where resection margins are close or involved. The other clinical guidelines have not discussed the management of mucosal melanoma. In the fractionation model, patients with mucosal

melanoma were divided into two branches: those with clear resection margins and those with close/involved margins. Patients with close/involved margins were recommended to have adjuvant radiotherapy.

It was difficult to ascertain the proportion of patients with mucosal melanoma who have close/involved margins post-surgery as most studies have small number of patients and do not report the margin status. Table 3 shows the numbers of patients, the sites of mucosal melanoma, the numbers of patients with close/involved margins, and the average proportion of patients with close/involved margins.

Table 3. Mucosal melanoma: proportion of patients with close/involved margins post-surgery from selected series

Study	Site of mucosal melanoma	Number of patients	Number of patients with close/involved margins	Proportion of patients with close/involved margins
Temam et al (214)	Head and neck	69	10	14%
Yii et al (227)	Head and neck	66	6	9%
Meleti et al (228)	Head and neck	11	4	36%
Moreno et al (215)	Head and neck	56	12	21%
Pessaux et al (229)	Anorectal	24	6	25%
Total		226	39	17%

Dose-fractionation

Owens et al (213) retrospectively reviewed 48 patients with mucosal melanoma of the head and neck treated between 1985 and 1998 at The University of Texas M. D. Anderson Cancer Centre (MDACC). Patients were treated with surgery alone, surgery and adjuvant radiotherapy, or surgery and biochemotherapy, with or without adjuvant radiotherapy. Twenty patients received surgical treatment alone. Of these, 9 patients (45%) failed locoregionally and 10 (50%) developed distant metastases. The 5-year survival rate was 45%. Twenty-four patients received adjuvant radiotherapy, 4 patients (17%) failed locoregionally and 11 patients (46%) developed distant metastases. The 5-year survival rate was 29%. The authors concluded that the addition of radiotherapy tended to decrease the rate of local failure (p=0.13), but did not significantly improve survival (p=0.73) because of the high rate of distant metastatic disease. In this study, patients with sinonasal tumours received 60 Gy in 30 fractions, while patients with oral lesions received 30 Gy in 5 fractions, given twice a week. The authors commented that the hypofractionated regimen is appropriate for adjuvant post-operative radiotherapy for all patients with mucosal melanoma, except those in whom critical structures, such as the orbit or central nervous system, are at risk of radiation-related injury. In these patients, they recommend the conventional fractionation regimen.

Temam et al (214) retrospectively reviewed 142 patients with primary head and neck mucosal melanoma treated at the Institut Gustave-Roussey, Villejuif, France, between 1979 and 1997. Of these, 69 patients with absence of metastatic disease and treated with definitive surgery with or without adjuvant radiotherapy were analysed. Thirty patients underwent surgery alone and 39 received adjuvant radiotherapy. Twenty-nine patients received 70 Gy and 10 patients received 50 Gy (mean dose 65 Gy). Conventional radiotherapy of 2 Gy per fraction was used except in 2 patients who received hypofractionated radiotherapy. The local control rates were 26% with surgery alone and 62% with surgery and adjuvant radiotherapy. Multivariate analysis of local control showed that the use of adjuvant radiotherapy was significantly associated with an improvement of this end point (p=0.05).

Moreno et al (215) reviewed 58 patients with sinonasal melanoma treated at the MDACC between 1993 and 2004. In the 31 patients who received adjuvant radiotherapy, the radiotherapy dose ranged from 30 to 66 Gy, with an average of 50.9 Gy. The majority of patients received 50 to 66 Gy in conventional fractionation. This study showed that patients who were treated with a total dose of ≥ 54 Gy had a lower rate of locoregional recurrence when compared with those who received a total dose of 30 to 50 Gy, and that the use of a standard fractionation schedule was also associated with a lower locoregional failure rate than hypofractionation.

Based on these three largest series identified of patients with mucosal melanoma of the head and neck treated with adjuvant radiotherapy, most patients received a dose in the vicinity of 60 Gy in 2 Gy per fraction. Head and neck is the most common site of mucosal melanoma. For the more uncommon primary sites such as the anal canal, vulva and vagina, it is reasonable to use the same dose fractionation schedule. In this model, the dose fractionation schedule, 60 Gy in 30 fractions, was used in patients recommended to have adjuvant radiotherapy for mucosal melanoma.

3. Cutaneous melanoma, adjuvant radiotherapy for multiple lymph node involvement: radiotherapy dose

The NHMRC guidelines (221) state that no particular radiotherapy schedule has been found superior to other schedules. No specific dose fractionation schedules are recommended in the guidelines.

The NCCN guidelines (220) recommend the following dose fractionation schedules: 30 Gy in 5 fractions, 48 Gy in 20 fractions, 50 Gy in 25 fractions and 60 Gy in 30 fractions. The guidelines state that a recent multi-centre randomised phase III trial of patients with melanoma with lymph node metastases showed that lymph node recurrence was significantly less frequent in patients who received adjuvant radiotherapy compared to those who were observed, but there was no improvement in overall survival (230). In this Intergroup TROG and Australian and New Zealand Melanoma Trials Group

study, 250 patients were randomised to adjuvant radiotherapy or observation after lymphadenectomy. Patients were treated with the dose fractionation schedule, 48 Gy in 20 fractions.

In this model, the dose fractionation schedule, 48 Gy in 20 fractions, was used based on this randomised controlled study which showed an improvement in regional control with adjuvant radiotherapy. A sensitivity analysis was performed to assess the impact of the range of number of fractions (5 to 30 fractions) on the average number of fractions per melanoma patient.

4. Role of adjuvant radiotherapy for primary cutaneous melanoma

In the optimal radiotherapy utilisation model (18-19), post-operative radiotherapy was recommended for pT4 head and neck melanoma, based on the recommendation of the previous NHMRC guidelines published in 1999 (226) that adjuvant radiotherapy should be considered for patients with T4 melanoma, and expert opinion that adjuvant radiotherapy could be reserved for pT4 melanoma of the head and neck where there is difficulty in achieving clear deep surgical margins and the need for conservative surgery to maintain function.

The current NHMRC guidelines (221) no longer recommend adjuvant radiotherapy for pT4 melanoma. The NCCN guidelines (220) recommend that adjuvant radiotherapy be considered when adequate surgical resection is not possible. Since it is in patients with pT4 melanoma of the head and neck where adequate surgical resection is difficult, in this model, these patients were recommended to have adjuvant radiotherapy.

The NCCN guidelines (220) also recommend that adjuvant radiotherapy be considered in patients with desmoplastic melanoma with extensive neurotropism.

5. Adjuvant radiotherapy for pT4 cutaneous melanoma of the head and neck: radiotherapy dose

No specific dose fractionation schedules are recommended in the guidelines.

Chang et al (218) retrospectively reviewed 56 patients with high risk melanoma treated with adjuvant radiotherapy at the University of Florida between 1980 and 2004. Their initial treatment strategy employed conventional dose fractionation. In 1990, they adopted the hypofractionated schedule of 30 Gy in 5 fractions, given twice a week, after publication of the preliminary results of the study of 83 patients treated with hypofractionation at MDACC (231). This study showed 2-year locoregional control rates exceeding 80% with this dose fractionation schedule. Ang et al (219) subsequently reported on 174 patients with cutaneous melanoma of the head and neck treated with this dose fractionation schedule. The actuarial 5-year locoregional control rate was 88%.

In the study reported by Chang et al (218), 41 patients (73%) were treated with the hypofractionated schedule, 14 patients (25%) were treated with once-daily fractionation to a median dose of 60 Gy (range 50 to 70 Gy) at a median dose of 2 Gy per fraction. One patient received twice-daily fractionation. There was no statistically significant difference in locoregional control between conventional fractionation and hypofractionation with a 5-year in-field locoregional control of 87% in both arms (p=0.966). Two patients (4%) experienced severe late complications (osteoradionecrosis of the temporal bone and radiation plexopathy), and both were treated with the hypofractionated schedule. The authors concluded that conventional fractionation and hypofractionation are equally efficacious. They commented that for patients who have poor prognosis, are medically frail or require only a modest treatment area, hypofractionation would be appropriate. However, in situations in which the disease is adjacent to critical neurologic or optic structures sensitive to larger fraction sizes or that require large radiation fields, conventional fractionation is preferred to reduce the risk of late complications. They also suggested that disease located on the scalp would likely be treated with conventional dose fractionation, because large fraction sizes could lead to a risk of bone exposure.

For the purposes of this model, a more conventional dose fractionation schedule was recommended for patients treated with adjuvant radiotherapy for pT4 cutaneous melanoma of the head and neck to reduce the risk of late complications, as the disease is usually in proximity to critical structures and bone. The same dose fractionation schedule as used for adjuvant nodal radiotherapy, 48 Gy in 20 fractions, was used in these patients as it has been shown to be efficacious and safe. A sensitivity analysis was performed to assess the impact of the range of number of fractions (5 to 30 fractions) on the average number of fractions per melanoma patient (see note 3).

6. Adjuvant radiotherapy for desmoplastic melanoma: radiotherapy dose

No specific dose fractionation schedules are recommended in the guidelines.

There are limited data on the use of adjuvant radiotherapy for desmoplastic melanoma. The two largest series identified were reported by Chen et al (216) and Foote et al (217). Chen et al (216) reported on 128 patients with desmoplastic melanoma treated at the Sydney Melanoma Unit and the Sydney Cancer Centre, Australia, from 1996 to 2007. All patients underwent local excision, 27 of whom received adjuvant radiotherapy. In this study, a range of dose fractionation schedules were used (ranging from 5 fractions to 32 fractions), with 48 to 50 Gy in 20 to 25 fractions being used most commonly.

Foote et al (217) reported on 24 patients who were treated with surgery and adjuvant radiotherapy at the Princess Alexandra Hospital, Queensland, Australia, between 1997 and 2006. Local recurrence occurred in 2 patients (8%). Patients received 48 to 60 Gy in 20 to 30 fractions. The median dose prescribed was 48 Gy in 20 fractions.

In this model, the dose fractionation schedule as used for adjuvant nodal radiotherapy, 48 Gy in 20 fractions, was used in patients recommended to have adjuvant radiotherapy for desmoplastic melanoma. A sensitivity analysis was performed to assess the impact of the range of number of fractions (5 to 30

fractions) on the average number of fractions per melanoma patient (see note 3).

7. Proportion of patients with nodal/brain/bone recurrence

Cohn-Cedermark et al (222) undertook a population-based study of 2493 patients with cutaneous melanoma. At a median follow-up of 11 years, 569 patients with recurrence were identified. Of the 307 patients with lymph node, brain or bone as the site of first recurrence, 275 patients (90%) had lymph node, 24 patients (8%) had brain and 8 patients (2%) had bone as the first site of recurrence respectively. These data were used in the model to divide the branch of patients with nodal/brain/bone recurrence into three branches: those with nodal recurrence (0.90), those with brain recurrence (0.08) and those with bone recurrence (0.02).

8. Stage I-III cutaneous non-desmoplastic melanoma, adjuvant radiotherapy for nodal recurrence: radiotherapy dose

The NHMRC guidelines (221) and NCCN guidelines (220) recommend surgery for patients with nodal recurrence, and adjuvant radiotherapy for patients with adverse pathology such as multiple involved lymph nodes, extranodal disease, and large size. The NHMRC guidelines (221) comment that although most evidence relates to the initial management of lymph nodes, extrapolation to the recurrent situation seems reasonable, and that no particular dose fractionation schedule has been found superior to other schedules. In this model, the same dose fractionation schedule as used for adjuvant nodal radiotherapy in the primary setting, 48 Gy in 20 fractions, was used in patients recommended to have adjuvant nodal radiotherapy in the recurrent setting. A sensitivity analysis was performed to assess the impact of the range of number of fractions (5 to 30 fractions) on the average number of fractions per melanoma patient (see note 3).

In this model, all patients with nodal recurrence were assumed to have surgically resectable disease. This was based on a randomised trial carried out

by the World Health Organisation (WHO) melanoma program. In this study, 240 patients were randomised to immediate node dissection after wide local excision of the primary lesion, or delayed node dissection until the time of appearance of regional node metastases (232). All patients in the “delayed” group who developed nodal recurrence as first recurrence underwent node dissection. It is acknowledged that not all nodal recurrences will be salvageable. This is likely to represent a small proportion and no data have been identified despite an extensive literature search, therefore the assumption was thought most reasonable.

9. Stage IV cutaneous melanoma, palliative radiotherapy for nodal disease: radiotherapy dose

The NHMRC guidelines (221) state that bulky metastases such as those involving lymph nodes may require more lengthy radiotherapy schedules, such as 40 Gy in 15 fractions or 45 Gy in 20 fractions.

Olivier et al (233) retrospectively reviewed 84 patients treated with palliative radiotherapy at the Mayo Clinic between 1988 and 2000 for melanoma lesions that were not metastatic to the central nervous system. There were a total of 114 metastatic lesions which included bone, subcutaneous, nodal and visceral metastases. A broad range of dose fractionation schedules were employed. The median total dose was 30 Gy (range 6 to 64.8 Gy) and the median dose per fraction was 3 Gy (range 1.8 to 8 Gy). Symptomatic improvement occurred in 84% of lesions treated. Patients treated with > 30 Gy had significantly longer freedom from progression ($p=0.01$) and survival ($p<0.0001$) compared with patients given ≤ 30 Gy.

The authors concluded that doses > 30 Gy were found to be associated with prolonged palliation, but cautioned that the lack of performance status data and other unknown confounding factors in this retrospective study limit the applicability of these results. They commented that common palliative radiotherapy regimens include 8 Gy given in a single fraction or 30 Gy given in 10 fractions, but recommended that higher doses be considered in patients with

metastatic melanoma and a performance status that could tolerate such therapy. For patients with a longer expected survival, the authors stated that a dose of 37.5 Gy given in 15 fractions (2.5 Gy per fraction) may be a reasonable regimen.

In this model, the dose fractionation schedule, 40 Gy in 15 fractions, was used for patients with stage IV disease with symptomatic nodal metastases as recommended in the NHMRC guidelines (221). A sensitivity analysis was performed to assess the impact of the range of number of fractions (15 to 20 fractions), as recommended in the guidelines, on the average number of fractions per melanoma patient.

10. Palliative radiotherapy for brain metastases: radiotherapy dose

The dose fractionation schedule, 20 Gy in 5 fractions, was used in this model. A sensitivity analysis was performed to assess the impact of the range of number of fractions (5 to 10 fractions) on the average number of fractions per melanoma patient (see chapter 18).

11. Palliative radiotherapy for bone metastases: radiotherapy dose

A single fraction of 8 Gy was used in this model. A sensitivity analysis was performed to assess the impact of the range of number of fractions (1 to 5 fractions) on the average number of fractions per melanoma patient (see chapter 18).

Sensitivity Analysis

The optimal number of fractions per melanoma patient was 4.2.

As discussed by Delaney et al (18-19), there were several data elements where there was uncertainty. These included the proportion of patients with symptomatic brain, bone or nodal metastases (0.21 to 0.51) and the proportion

of patients with multiple nodal involvement recommended to have radiotherapy (0.26 to 0.55).

There was also a range of number of fractions considered appropriate for adjuvant radiotherapy for multiple nodal involvement (5 to 30 fractions), adjuvant radiotherapy for pT4 melanoma (5 to 30 fractions), adjuvant radiotherapy for desmoplastic melanoma (5 to 30 fractions), adjuvant radiotherapy for nodal recurrence (5 to 30 fractions), palliative radiotherapy for symptomatic nodal metastases in patients with stage IV melanoma (15 to 20 fractions), palliative radiotherapy for brain metastases (5 to 10 fractions), and for bone metastases (1 to 5 fractions).

To assess the impact of these uncertainties on the average number of radiotherapy fractions in melanoma patients, a one-way sensitivity analysis was performed for each of these variables. The impact of these variables on the average number of radiotherapy fractions is illustrated by a tornado diagram (Fig. 1). The average number of radiotherapy fractions per melanoma patient varied between 2.9 and 5.5. The optimal fractionation tree for melanoma is shown in Figs. 2-4.

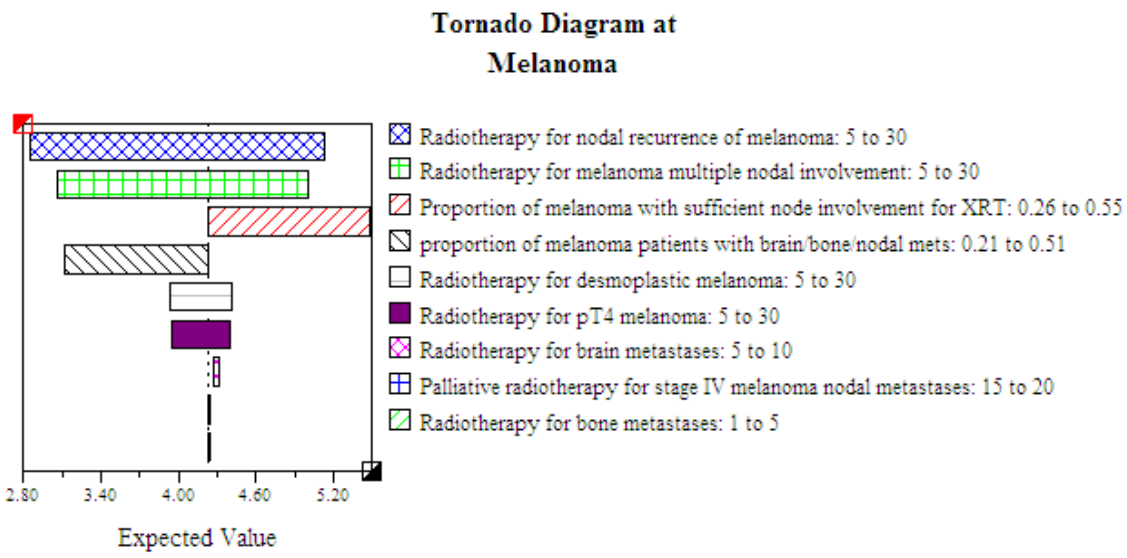

Figure 1. Melanoma. Sensitivity analysis

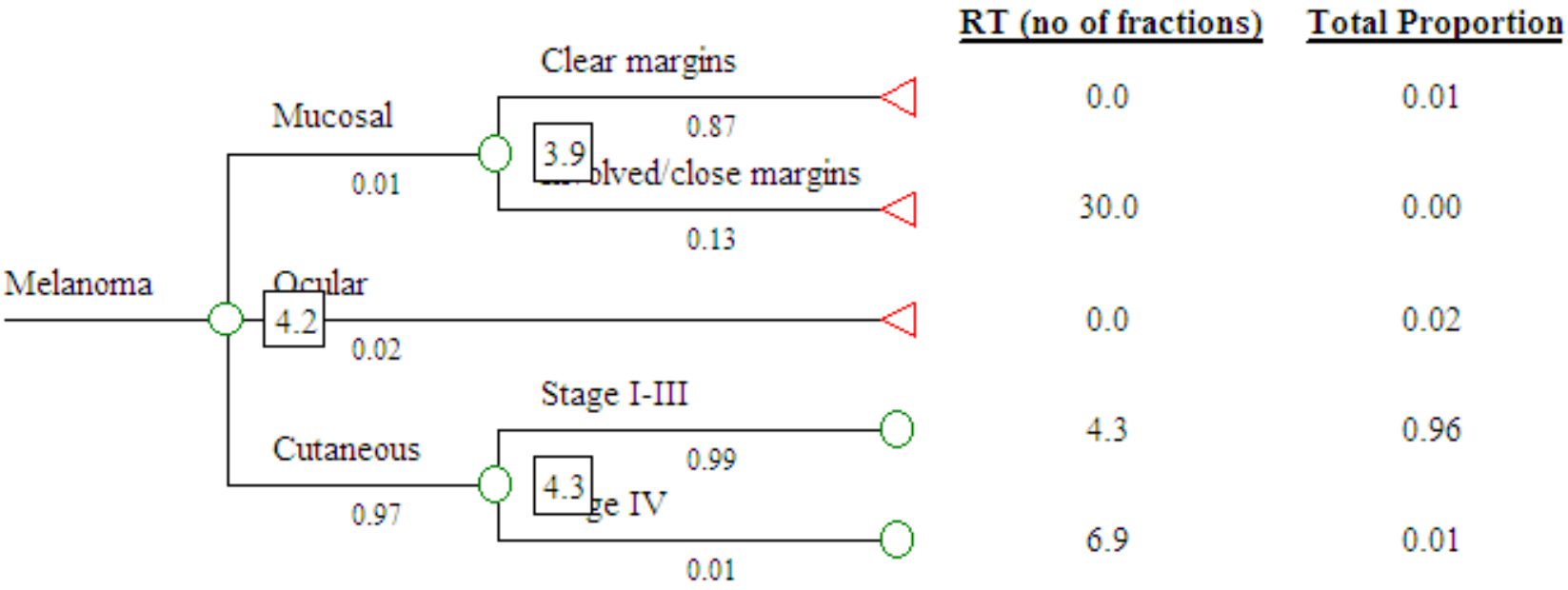

Figure 2. Melanoma. Optimal fractionation tree

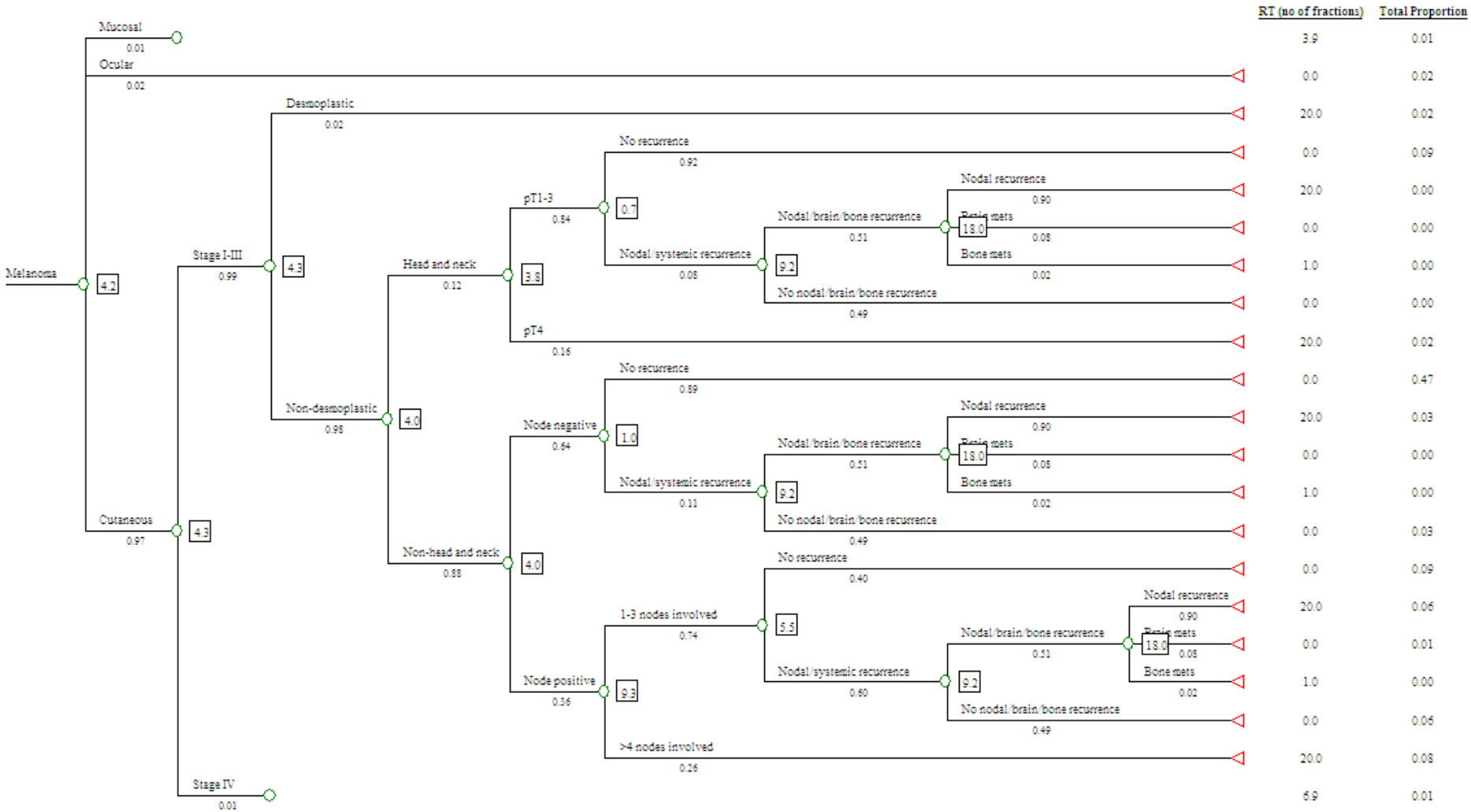

Figure 3. Stage I-III cutaneous melanoma. Optimal fractionation tree

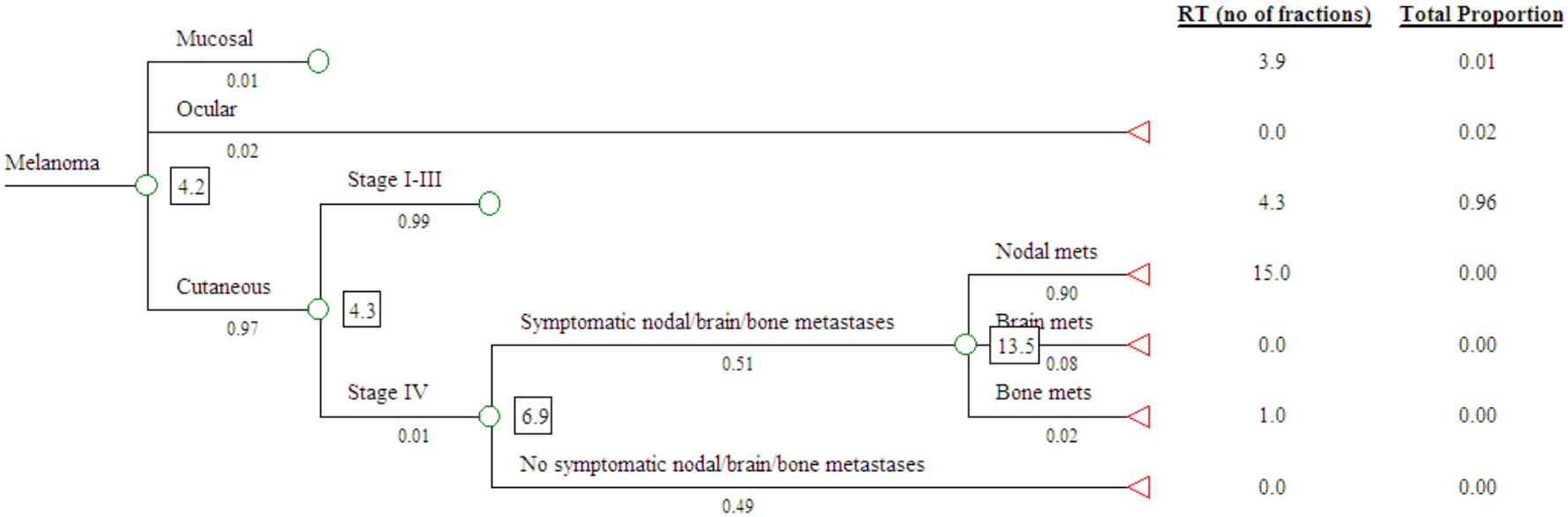

Figure 4. Stage IV cutaneous melanoma. Optimal fractionation tree

Chapter 7 Thoracic Cancer

7.1 Lung Cancer

Table 1. Lung Cancer. Number of fractions of radiotherapy – Sources of evidence

Outcome no (utilisation model)	Clinical scenario (utilisation model)	Outcome no (fractionation model)	Clinical scenario (addition to fractionation model)	No of fractions	Range of no of fractions	Level of evidence	References	Notes	Proportion of all lung cancer patients
1	SCLC, limited stage, good PS	1	−	30	15−35	II	NHMRC guidelines (234) NCCN guidelines (235) NCI guidelines (236) BCCA guidelines (237) NICE guidelines (238)	2	0.06
−	−	3	SCLC, extensive stage, good PS, response to chemotherapy	10	10−18	II	NHMRC guidelines (234) NCCN guidelines (235)	3	0.04
3	SCLC, extensive stage, good PS, local symptoms	4	SCLC, extensive stage, good PS, no response to chemotherapy, local symptoms	5	5−13	−	NHMRC guidelines (234) RCR guidelines (18) SIGN guidelines (239)	4	0.02

Outcome no (utilisation model)	Clinical scenario (utilisation model)	Outcome no (fractionation model)	Clinical scenario (addition to fractionation model)	No of fractions	Range of no of fractions	Level of evidence	References	Notes	Proportion of all lung cancer patients
4	SCLC, extensive stage, good PS, no local symptoms, brain metastases	5	SCLC, extensive stage, good PS, no response to chemotherapy, no local symptoms, brain metastases	5	5−10	II	RCR guidelines (18)	5	0.01
5	SCLC, extensive stage, good PS, no local symptoms, no brain metastases, painful bone metastases	6	SCLC, extensive stage, good PS, no response to chemotherapy, no local symptoms, no brain metastases, painful bone metastases	1	1−5	I	RCR guidelines (18)	6	<0.01
8	NSCLC, stage I-II, good PS, surgery, positive margins	9	−	27	27−33	IV	NCCN guidelines (240)	8	<0.01

Outcome no (utilisation model)	Clinical scenario (utilisation model)	Outcome no (fractionation model)	Clinical scenario (addition to fractionation model)	No of fractions	Range of no of fractions	Level of evidence	References	Notes	Proportion of all lung cancer patients
9	NSCLC, stage I-II, good PS, surgery, negative margins, symptomatic local relapse	10	−	5	5−13	−	NHMRC guidelines (234) RCR guidelines (18) SIGN guidelines (239)	13	0.04
11	NSCLC, stage I-II, good PS, surgery, negative margins, no local relapse, brain metastases	12	−	5	5−10	II	RCR guidelines (18)	14	0.01
12	NSCLC, stage I-II, good PS, surgery, negative margins, no local relapse, no brain metastases, painful bone metastases	13	−	1	1−5	I	RCR guidelines (18)	15	<0.01
15	NSCLC, stage I-II,	16	−	30	30−36	II	NHMRC guidelines	7	0.08

Outcome no (utilisation model)	Clinical scenario (utilisation model)	Outcome no (fractionation model)	Clinical scenario (addition to fractionation model)	No of fractions	Range of no of fractions	Level of evidence	References	Notes	Proportion of all lung cancer patients
	good PS, no surgery						(234) NCCN guidelines (240) RCR guidelines (18) NICE guidelines (238)		
16	NSCLC, stage I-II, poor PS, no surgery, symptomatic local or distant disease requiring radiotherapy	17	Local disease	1	1−2	II	NHMRC guidelines (234) RCR guidelines (18) SIGN guidelines (239)	10	<0.01
		18	Bone metastases	1	1−5	I	RCR guidelines (18)	15	<0.01
		19	Brain metastases	5	5−10	II	RCR guidelines (18)	14	<0.01
		20	Other metastases	1	1−2	−	−	11	<0.01
18	NSCLC, stage IIIA, good PS, surgery, N0 or N1, positive margins	22	−	27	27−33	IV	NCCN guidelines (240)	8	<0.01
19	NSCLC, stage III A, good PS, surgery, N0 or N1, negative	23	−	5	5−13	−	NHMRC guidelines (234) RCR guidelines (18)	13	0.01

Outcome no (utilisation model)	Clinical scenario (utilisation model)	Outcome no (fractionation model)	Clinical scenario (addition to fractionation model)	No of fractions	Range of no of fractions	Level of evidence	References	Notes	Proportion of all lung cancer patients
	margins, symptomatic local relapse						SIGN guidelines (239)		
20	NSCLC, stage IIIA, good PS, surgery, N0 or N1, negative margins, no local relapse, distant relapse, brain metastases	24	−	5	5−10	II	RCR guidelines (18)	14	<0.01
21	NSCLC, stage IIIA, good PS, surgery, N0 or N1, negative margins, no local relapse, distant relapse, no brain metastases, painful bone metastases	25	−	1	1−5	I	RCR guidelines (18)	15	<0.01

Outcome no (utilisation model)	Clinical scenario (utilisation model)	Outcome no (fractionation model)	Clinical scenario (addition to fractionation model)	No of fractions	Range of no of fractions	Level of evidence	References	Notes	Proportion of all lung cancer patients
25	NSCLC, stage IIIA, good PS, surgery, N2 disease	29	–	25	25–33	II	NCCN guidelines (240)	8	0.01
26	NSCLC, stage IIIA, good PS, no surgery	30	–	30	30–36	II	NHMRC guidelines (234) NCCN guidelines (240) SIGN guidelines (239) RCR guidelines (18) NICE guidelines (238) Cancer Care Ontario guidelines (241)	7	0.10
27	NSCLC, stage IIIA, poor PS, no surgery, local or distant symptoms requiring radiotherapy	31	Local disease	1	1–2	II	NHMRC guidelines (234) RCR guidelines (18) SIGN guidelines (239)	10	<0.01
		32	Bone metastases	1	1–5	I	RCR guidelines (18)	15	<0.01
		33	Brain metastases	5	5–10	II	RCR guidelines (18)	14	<0.01
		34	Other metastases	1	1–2	–	–	11	<0.01

Outcome no (utilisation model)	Clinical scenario (utilisation model)	Outcome no (fractionation model)	Clinical scenario (addition to fractionation model)	No of fractions	Range of no of fractions	Level of evidence	References	Notes	Proportion of all lung cancer patients
29	NSCLC, stage IIIB, good PS	36	–	30	30–36	II	NHMRC guidelines (234) NCCN guidelines (240) SIGN guidelines (239) RCR guidelines (18) NICE guidelines (238) Cancer Care Ontario guidelines (241)	7	0.13
30	NSCLC, stage IIIB, poor PS, local or distant symptoms requiring radiotherapy	37	Local disease	1	1–2	II	NHMRC guidelines (234) RCR guidelines (18) SIGN guidelines (239)	10	0.01
		38	Bone metastases	1	1–5	I	RCR guidelines (18)	15	<0.01
		39	Brain metastases	5	5–10	II	RCR guidelines (18)	14	<0.01
		40	Other metastases	1	1–2	–	–	11	<0.01
32	NSCLC, stage IV, symptomatic local disease	42	–	1	–	II	NHMRC guidelines (234)	12	0.19

Outcome no (utilisation model)	Clinical scenario (utilisation model)	Outcome no (fractionation model)	Clinical scenario (addition to fractionation model)	No of fractions	Range of no of fractions	Level of evidence	References	Notes	Proportion of all lung cancer patients
33	NSCLC, stage IV, no local symptoms, brain metastases	43	−	5	5−10	II	RCR guidelines (18)	14	0.02
34	NSCLC, stage IV, no local symptoms, no brain metastases, painful bone metastases	44	−	1	1−5	I	RCR guidelines (18)	15	0.01

Proportion of all lung cancer patients in whom radiotherapy is recommended	**0.77 (77%)**
Proportion of all cancer patients = 0.77 x 0.09 =	**0.069 (6.9%)**
Average number of fractions per lung cancer patient	**12.8**
Average number of fractions per treatment course = 12.8/0.77 =	**16.6**

Key to abbreviations in lung cancer decision tree and tables

SCLC – Small cell lung cancer

PS – Performance status

NHMRC – National Health and Medical Research Council

NCCN – National Comprehensive Cancer Network

NCI – National Cancer Institute

BCCA – British Columbia Cancer Agency

NICE – National Institute for Health and Clinical Excellence

RCR – Royal College of Radiologists

SIGN – Scottish Intercollegiate Guidelines Network

NSCLC – Non-small cell lung cancer

Table 2. Lung cancer. The incidence of attributes used to define number of radiotherapy fractions

Key	Population or subpopulation of interest	Attribute	Proportion of populations with this attribute	Quality of Information	References	Notes
A	All registry cancers	Lung cancer	0.09	α	AIHW (16)	1
B	Lung cancer, SCLC, limited stage, good performance status	Complete response to thoracic radiotherapy	0.56	θ	Turrisi et al (242)	2
C	Lung cancer, SCLC, extensive stage, good performance status	Response to chemotherapy	0.61	θ	Roth et al (243)	3
D	Lung cancer, NSCLC, stage I-II, poor performance status, symptomatic local or distant disease requiring radiotherapy	Local disease Bone metastases Brain metastases Other metastases	0.74 0.12 0.12 0.02	ζ	Estall et al (244)	9
E	Lung cancer, NSCLC, stage IIIA, poor performance status, symptomatic local or distant disease requiring radiotherapy	Local disease Bone metastases Brain metastases Other metastases	0.74 0.12 0.12 0.02	ζ	Estall et al (244)	9
F	Lung cancer, NSCLC, stage IIIB, poor performance status,	Local disease Bone metastases	0.74 0.12	ζ	Estall et al (244)	9

Key	Population or subpopulation of interest	Attribute	Proportion of populations with this attribute	Quality of Information	References	Notes
	symptomatic local or distant disease requiring radiotherapy	Brain metastases Other metastases	0.12 0.02			

Lung Cancer

The optimal radiotherapy fractionation model for lung cancer was based on the optimal radiotherapy utilisation model for lung cancer (1, 245).

Treatment Guidelines

The following clinical practice guidelines for the management of lung cancer were identified:

- NHMRC clinical practice guidelines for the prevention, diagnosis and management of lung cancer (2004) (234)
- NCCN clinical practice guidelines on non-small cell lung cancer (version 2.2011) (240)
- NCCN clinical practice guidelines on small cell lung cancer (version 1.2011) (235)
- NCI PDQ guidelines on non-small cell lung cancer (2010) (246)
- NCI PDQ guidelines on small cell lung cancer (2010) (236)
- SIGN guidelines on management of patients with lung cancer (2005) (239)
- RCR radiotherapy dose-fractionation guidelines (2006) (18)
- NICE guidelines on the diagnosis and treatment of lung cancer (2005) (238)
- BC Cancer Agency lung cancer management guidelines (2010) (237)
- Cancer Care Ontario guidelines on management of unresected stage III non-small cell lung cancer (2006) (241)
- Cancer Care Ontario guidelines on post-operative adjuvant radiation therapy in stage II or IIIA completely resected non-small cell lung cancer (2005) (247)
- Cancer Care Ontario guidelines on post-operative adjuvant chemotherapy, with or without radiotherapy, in completely resected non-small cell lung cancer (2006) (248)

Explanatory Notes for Tables 1 and 2

1. Incidence of lung cancer

Lung cancer constituted 9.1% of all cancers occurring in Australia in 2005 (16).

Small cell lung cancer (SCLC)

2. Limited stage SCLC with good performance status

The clinical guidelines recommend chemotherapy and thoracic radiotherapy for patients with limited stage SCLC with good performance status. A range of dose fractionation schedules are recommended in the guidelines, as shown in table 3.

Table 3. Radical radiotherapy in limited stage SCLC: radiotherapy dose fractionation schedules recommended in the guidelines

Guidelines	Radiotherapy dose
NHMRC guidelines (234)	45 Gy in 30 fractions
NCCN guidelines (235)	45 Gy in 30 fractions 60-70 Gy in 30-35 fractions
NCI guidelines (236)	45 Gy in 30 fractions ≥ 60 Gy in 2 Gy per fraction
BC Cancer Agency guidelines (237)	40 Gy in 15 fractions
NICE guidelines (238)	40 Gy in 15 fractions to 50 Gy in 25 fractions

The NHMRC guidelines (234) state that in patients with limited stage SCLC, the addition of thoracic radiotherapy to standard combination chemotherapy improves overall survival and should be incorporated into a comprehensive treatment plan. The guidelines state that accelerated radiotherapy is associated with a survival advantage compared with standard fractionation making reference to the randomised controlled study reported by Turrisi et al (242) in which 417 patients with limited stage SCLC were randomised to twice-daily

radiotherapy (45 Gy in 30 fractions, 1.5 Gy per fraction) or once-daily radiotherapy (45 Gy in 25 fractions, 1.8 Gy per fraction). This study showed that twice-daily radiotherapy significantly improved survival compared with once-daily radiotherapy (5-year survival 26% versus 16%).

The NCCN guidelines on SCLC (235) recommend a dose of 45 Gy in 30 fractions (twice-daily) or 60 to 70 Gy in 30 to 35 daily fractions. Although there is uniform NCCN consensus for both recommendations, the guidelines state that the recommendation of 45 Gy in 30 fractions is based on higher level evidence. The NCI guidelines (236) state that the optimal dose of radiotherapy is controversial, and that both once-daily and twice-daily radiotherapy schedules have been used. The guidelines comment that once-daily fractions to doses of greater than 60 Gy are feasible and commonly used, but their clinical benefits are yet to be defined in phase III trials.

The BC Cancer Agency guidelines (237) state that the dose fractionation schedule traditionally employed in Canada is 40 Gy in 15 fractions. The NICE guidelines (238) recommend a dose of 40 Gy in 15 fractions to 50 Gy in 25 fractions.

The dose fractionation schedule, 45 Gy in 30 fractions (twice-daily), was used in this model, based on the recommendation in the NHMRC guidelines (234) and results of the randomised controlled trial reported by Turrisi et al (242). A sensitivity analysis was performed to assess the impact of the range of number of fractions recommended in the clinical guidelines (15 to 35 fractions) on the average number of fractions per lung cancer patient.

3. Extensive stage SCLC with good performance status, PCI

The NHMRC guidelines (234), the NCCN guidelines (235) and the NCI guidelines (246) recommend PCI in patients with extensive stage SCLC who have achieved a response to combination chemotherapy of platinum and etoposide. In a large randomised controlled study in which 437 patients with extensive stage SCLC were randomised to combination chemotherapy of

cisplatin and etoposide, combination chemotherapy of cyclophosphamide, doxorubicin and vincristine, or alternation of these two regimens, the response rate was 61% in the group randomised to cisplatin and etoposide (243). This proportion was used in the model to divide patients with extensive stage SCLC with good performance status into two branches: those who responded to platinum and etoposide chemotherapy (0.61) and those who did not respond to chemotherapy (0.39). Patients who responded to chemotherapy were depicted having PCI in the model.

For PCI in extensive stage SCLC, the NHMRC guidelines (234) recommend a dose of 30 Gy in 10 fractions or 36 Gy in 18 fractions. The NCCN guidelines (240) recommend a dose of 25 Gy in 10 fractions or 30 Gy in 10 to 15 fractions. In this model, the dose fractionation schedule, 30 Gy in 10 fractions, was used for PCI in patients with extensive stage SCLC, as this is the shorter dose fractionation schedule recommended in the NHMRC guidelines. A sensitivity analysis was performed to assess the impact of the range of number of fractions (10 to 18 fractions) on the average number of fractions per lung cancer patient.

4. Extensive stage SCLC with good performance status, radiotherapy for local symptoms

The NHMRC guidelines (234) state that radiotherapy is an effective treatment for the management of thoracic symptoms, and short courses of radiotherapy are as effective as more fractionated regimens in symptom relief. The guidelines also state that there appears to be improved survival in patients with a good performance status receiving higher doses of palliative radiotherapy, compared to single or two fraction courses.

These recommendations are based on randomised controlled trials of palliative radiotherapy in patients with non-small cell lung cancer (NSCLC). The MRC has published a series of studies investigating the role of palliative radiotherapy in the symptomatic management of locally advanced intrathoracic disease (249-251). There was no advantage with respect to palliation of symptoms in giving

longer courses of radiotherapy, with poor prognosis patients gaining the same benefit from one fraction of radiotherapy compared to two fractions, and in a slightly better prognosis group, two fractions of radiotherapy gave the same benefit as ten fractions. For patients with good performance status, a course of 39 Gy in 13 fractions has been shown to result in improved survival compared to 17 Gy in 2 fractions (252). Another study has shown improved survival in patients receiving 20 Gy in 5 fractions when compared to those receiving 10 Gy in 1 fraction (253).

The RCR dose-fractionation guidelines (18) recommend a dose of 20 Gy in 5 fractions or 39 Gy in 13 fractions for patients with extensive SCLC with good performance status, based on results of randomised controlled trials of NSCLC. Similarly, the SIGN guidelines (239) also recommend a dose of 39 Gy in 13 fractions based on results of these trials.

The shorter dose fractionation schedule, 20 Gy in 5 fractions, was used in this model. A sensitivity analysis was performed to assess the impact of the range of number of fractions (5 to 13 fractions) on the average number of fractions per lung cancer patient.

5. SCLC: brain metastases

The dose fractionation schedule, 20 Gy in 5 fractions, was used in this model. A sensitivity analysis was conducted to assess the impact of the range of number of fractions (5 to 10 fractions) on the average number of fractions per lung cancer patient (see chapter 18).

6. SCLC: bone metastases

A single fraction of 8 Gy was used in this model. A sensitivity analysis was performed to assess the impact of the range of number of fractions (1 to 5 fractions) on the average number of fractions per lung cancer patient (see chapter 18).

Non-small cell lung cancer

7. Stage I-IIIB NSCLC with good performance status: radical radiotherapy

A range of dose fractionation schedules are recommended in the guidelines, as shown in table 4.

Table 4. Radical radiotherapy for NSCLC: dose fractionation schedules recommended in the guidelines

Guidelines	Radiotherapy dose
NHMRC guidelines (234)	60 Gy in 30 fractions
NCCN guidelines (240)	60-70 Gy in 30-35 fractions
SIGN guidelines (239)	For stage III disease: 54 Gy in 36 fractions (3 fractions per day)
RCR guidelines (18)	54 Gy in 36 fractions (3 fractions per day) 60-66 Gy in 30-33 fractions
NICE guidelines (238)	54 Gy in 36 fractions (3 fractions per day)
Cancer Care Ontario guidelines (241)	For stage III disease: ≥ 60 Gy in 30 fractions

The NHMRC guidelines (234) state that in patients with locoregional inoperable NSCLC and with good performance status, higher doses of radiotherapy are associated with better response and possibly survival. Doses in the vicinity of 60 Gy in 6 weeks are recommended because they are safe and give the highest response rates. A dose of 60 Gy given over 6 weeks was shown to be associated with an improved response rate, but not survival, compared with lower doses in a RTOG prospective randomised study comparing various dose fractionation schedules (254).

The RCR guidelines (18), SIGN guidelines (239) and NICE guidelines (238) recommend continuous hyperfractionated accelerated radiotherapy (CHART), 54 Gy in 36 fractions, delivered 3 times daily, based on the results of a randomised multi-centre trial which showed that CHART resulted in a 22% reduction in the relative risk of death compared to conventional radiotherapy 60 Gy in 30 fractions (255).

The dose fractionation schedule, 60 Gy in 30 fractions, was used in this model based on the NHMRC guidelines recommendation. A sensitivity analysis was performed to assess the impact of the range of number of fractions (30 to 36 fractions) on the average number of fractions per lung cancer patient.

8. NSCLC with good performance status, post-operative radiotherapy for positive resection margins or pN2 disease

The NCCN guidelines (240) state that the post-operative radiotherapy dose should be based on margin status. The guidelines recommend a dose of 50 to 54 Gy in 1.8 to 2 Gy per fraction (25 to 30 fractions) for negative margins, and a dose of 54 to 60 Gy in 1.8 to 2 Gy per fraction (27 to 33 fractions) for positive margins or extracapsular nodal extension.

In this model, for patients with pN2 disease, the dose fractionation schedule, 50 Gy in 25 fractions, was used. A sensitivity analysis was performed to assess the impact of the range of number of fractions (25 to 33 fractions) on the average number of fractions per lung cancer patient.

For patients with positive resection margins, the dose fractionation schedule, 54 Gy in 27 fractions, was used. A sensitivity analysis was performed to assess the impact of the range of number of fractions (27 to 33 fractions) on the average number of fractions per lung cancer patient.

9. Stage I-III NSCLC with poor performance status, patients who develop symptomatic local or distant disease requiring radiotherapy:

proportion of patients who receive radiotherapy for local versus distant disease

In the optimal radiotherapy utilisation model (1, 245), patients with stage I-III NSCLC with poor performance status were recommended to have radiotherapy for symptomatic local or distant disease. Actual radiotherapy utilisation data of patients treated at the South Western Sydney Area Health Services, Australia, were used to subdivide these patients requiring radiotherapy into those requiring radiotherapy for local symptoms, bone metastases, brain metastases and to other sites (244). Of the 213 lung cancer patients who received palliative radiotherapy as their first course of radiotherapy from 1993 to 1996, 157 patients (74%) received radiotherapy to the thorax, 27 patients (12%) received radiotherapy for bone metastases, 25 patients (12%) received radiotherapy for brain metastases, and 4 patients (2%) received radiotherapy for soft tissue metastases.

10. Stage I-III NSCLC with poor performance status, symptomatic local disease: radiotherapy dose

The NHMRC guidelines (234) state that radiotherapy is an effective modality for the management of thoracic symptoms, and short courses of radiotherapy are as effective as more fractionated regimens. The guidelines make reference to the MRC studies which investigated the role of palliative radiotherapy in the symptomatic management of locally advanced intrathoracic disease (249-251). There was no advantage with respect to palliation of symptoms in giving longer courses of radiotherapy, with poor prognosis patients gaining the same benefit from 1 fraction of radiotherapy (10 Gy in 1 fraction) compared to 2 fractions (17 Gy in 2 fractions), and in a slightly better prognosis group, 2 fractions (17 Gy in 2 fractions) gave the same benefit as 10 fractions (30 Gy in 10 fractions).

The RCR guidelines (18) recommend a single fraction of 10 Gy for NSCLC patients with poor performance status. The SIGN guidelines (239) recommend a dose of 10 Gy in 1 fraction or 16 Gy in 2 fractions.

In the model, the dose fractionation schedule, 10 Gy in 1 fraction, was used. A sensitivity analysis was performed to assess the impact of the range of number of fractions (1 to 2 fractions) on the average number of fractions per lung cancer patient.

11. Stage I-III NSCLC with poor performance status, symptomatic soft tissue metastases: radiotherapy dose

No specific dose fractionation schedules are recommended in the guidelines. The same dose fractionation schedule for symptomatic local disease was used for these patients in the model. A sensitivity analysis was performed to assess the impact of the range of number of fractions (1 to 2 fractions) on the average number of fractions per lung cancer patient (see note 9).

12. Stage IV NSCLC, symptomatic local disease

The dose fractionation schedule, 10 Gy in 1 fraction, was used for these patients, based on the MRC study (249) which showed the same benefit from 1 fraction of radiotherapy (10 Gy in 1 fraction) compared to 2 fractions (17 Gy in 2 fractions) in poor prognosis patients (see note 9).

13. Stage I-IIIA NSCLC with good performance status, symptomatic local recurrence after surgery

No specific dose fractionation schedules are recommended in the guidelines. Guideline recommendations on palliative radiotherapy in patients with inoperable primary disease were used to determine the optimal dose fractionation schedules for these patients in the model.

The NHMRC guidelines (234) state that short courses of radiotherapy are as effective as more fractionated regimens for symptom control, but there appears to be improved survival in patients with a good performance status receiving higher doses of palliative radiotherapy, compared to single or two fraction courses. The RCR guidelines (18) recommend a dose of 39 Gy in 13 fractions

or 20 Gy in 5 fractions for patients with good performance status treated palliatively for NSCLC. The SIGN guidelines (239) recommend a dose of 39 Gy in 13 fractions.

Macbeth et al (252) reported on a randomised controlled study of 509 patients with inoperable NSCLC too locally extensive for radical radiotherapy. Patients were randomised to receive 39 Gy in 13 fractions or 17 Gy in 2 fractions. Although the shorter regimen had a more rapid palliative effect, the longer regimen was associated with a longer survival. Bezjak et al (253) reported on another randomised controlled study of 230 patients who were randomised to receive 20 Gy in 5 fractions or 10 Gy in 1 fraction. This study showed that both regimens provided a similar degree of palliation of thoracic symptoms, but the fractionated regimen was associated with improved survival.

In this model, the shorter dose fractionation schedule, 20 Gy in 5 fractions, was used for patients recommended to have palliative radiotherapy for symptomatic local recurrence after surgery. A sensitivity analysis was performed to assess the impact of the range of number of fractions (5 to 13 fractions) on the average number of fractions per lung cancer patient.

14. NSCLC: brain metastases

The dose fractionation schedule, 20 Gy in 5 fractions, was used in this model. A sensitivity analysis was conducted to assess the impact of the range of number of fractions (5 to 10 fractions) on the average number of fractions per lung cancer patient (see chapter 18).

15. NSCLC: bone metastases

A single fraction of 8 Gy was used in this model. A sensitivity analysis was performed to assess the impact of the range of number of fractions (1 to 5 fractions) on the average number of fractions per lung cancer patient (see chapter 18).

Sensitivity Analysis

The optimal number of fractions per lung cancer patient was 12.8.

As discussed by Delaney et al (1, 245), there were several data elements where there was uncertainty because of different proportions reported in the literature. These included the proportion of patients with extensive stage SCLC and local symptoms (0.43 to 0.61), the proportion of patients with SCLC with brain metastases (0.27 to 0.49), the proportion of patients undergoing resection for NSCLC and having positive margins (0.005 to 0.02), the proportion of stage IIIA NSCLC patients with 0 to 1 node involved who develop local recurrence (0.24 to 0.44), the proportion of patients with stage IIIA NSCLC who develop distant relapse (0.32 to 0.59) and the proportion of stage IIIB or IVA NSCLC patients with local symptoms (0.56 to 0.71).

There was also a range of number of fractions considered appropriate for radical radiotherapy for limited stage SCLC with good performance status (15 to 35 fractions), prophylactic cranial irradiation for patients with extensive stage SCLC with good performance status and response to chemotherapy (10 to 18 fractions), palliative radiotherapy for patients with extensive stage SCLC with good performance status (5 to 13 fractions), radical radiotherapy for stage I-IIIB NSCLC (30 to 36 fractions), post-operative radiotherapy for NSCLC with positive margins (27 to 33 fractions), post-operative radiotherapy for NSCLC with pN2 disease (25 to 33 fractions), palliative radiotherapy for symptomatic local disease in patients with stage I-III NSCLC with poor performance status (1 to 2 fractions), palliative radiotherapy for symptomatic local recurrence after surgery for stage I-IIIA NSCLC (5 to 13 fractions), and palliative radiotherapy for brain metastases (5 to 10 fractions) and for bone metastases (1 to 5 fractions).

To assess the impact of these uncertainties on the average number of radiotherapy fractions in lung cancer patients, a one-way sensitivity analysis was performed for each of these variables. The impact of these variables on the average number of radiotherapy fractions is illustrated by a tornado diagram (Fig. 1). The average number of radiotherapy fractions per lung cancer patient

varied between 11.9 and 14.7. This range is largely due to the range of number of fractions considered appropriate for radical radiotherapy for stage I-III NSCLC. The optimal fractionation tree for lung cancer is shown in Figs. 2-6.

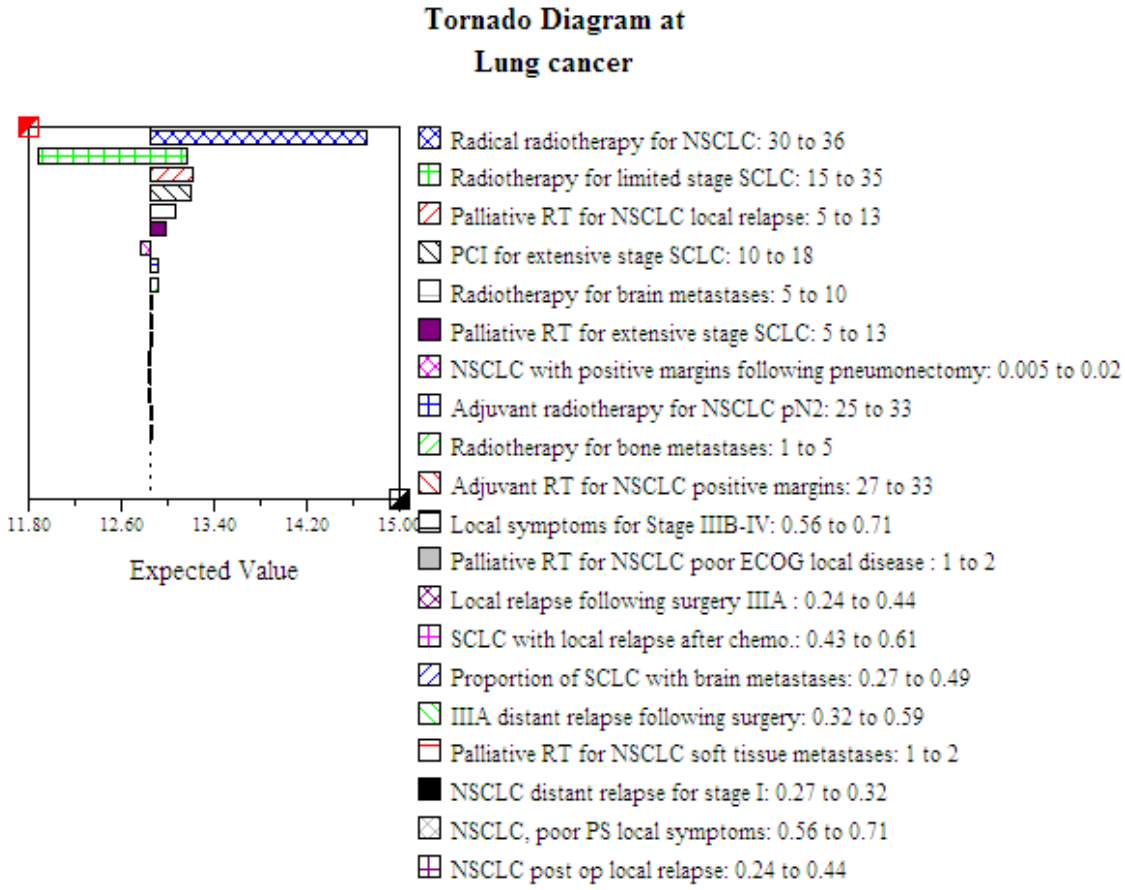

Figure 1. Lung cancer. Sensitivity analysis

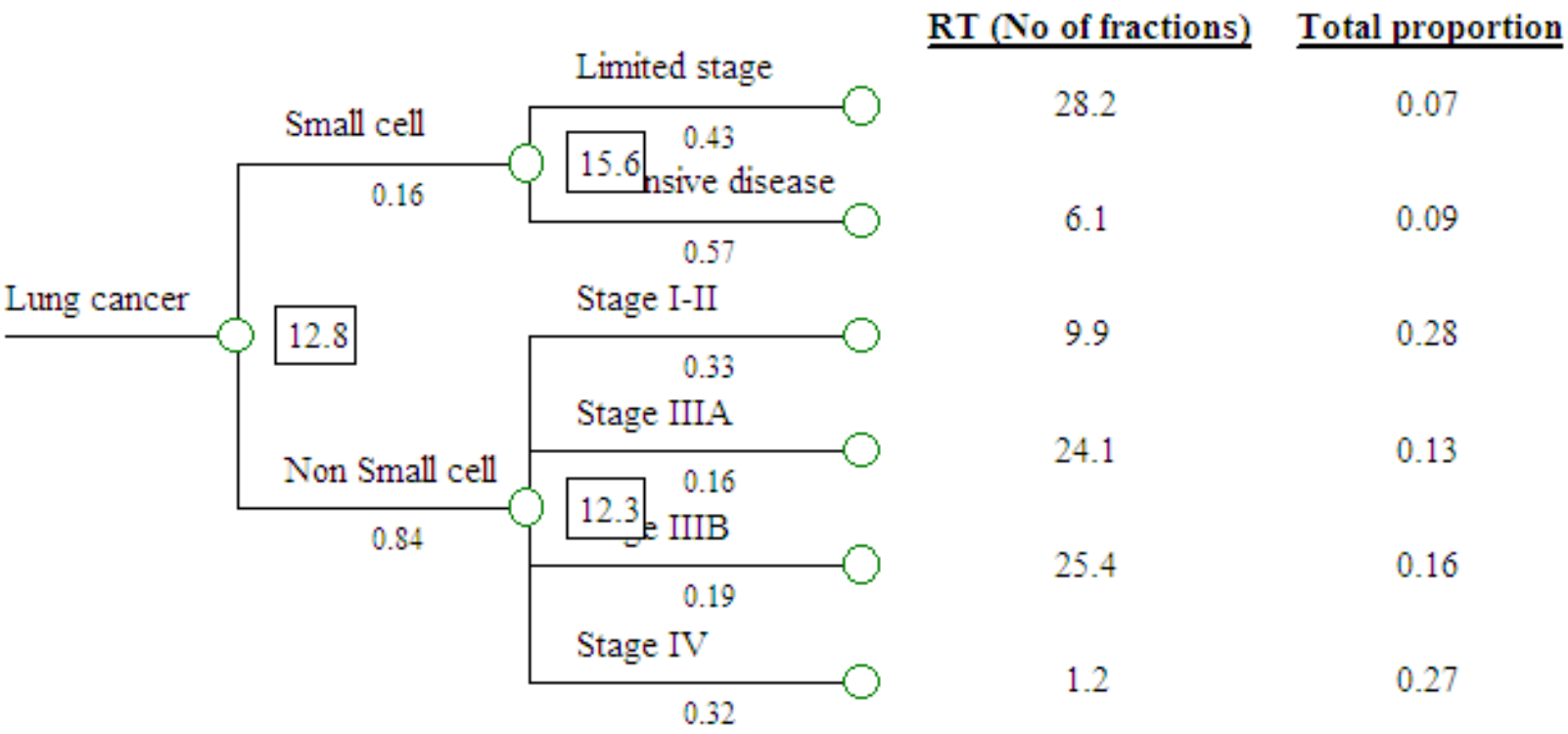

Figure 2. Lung cancer. Optimal fractionation tree

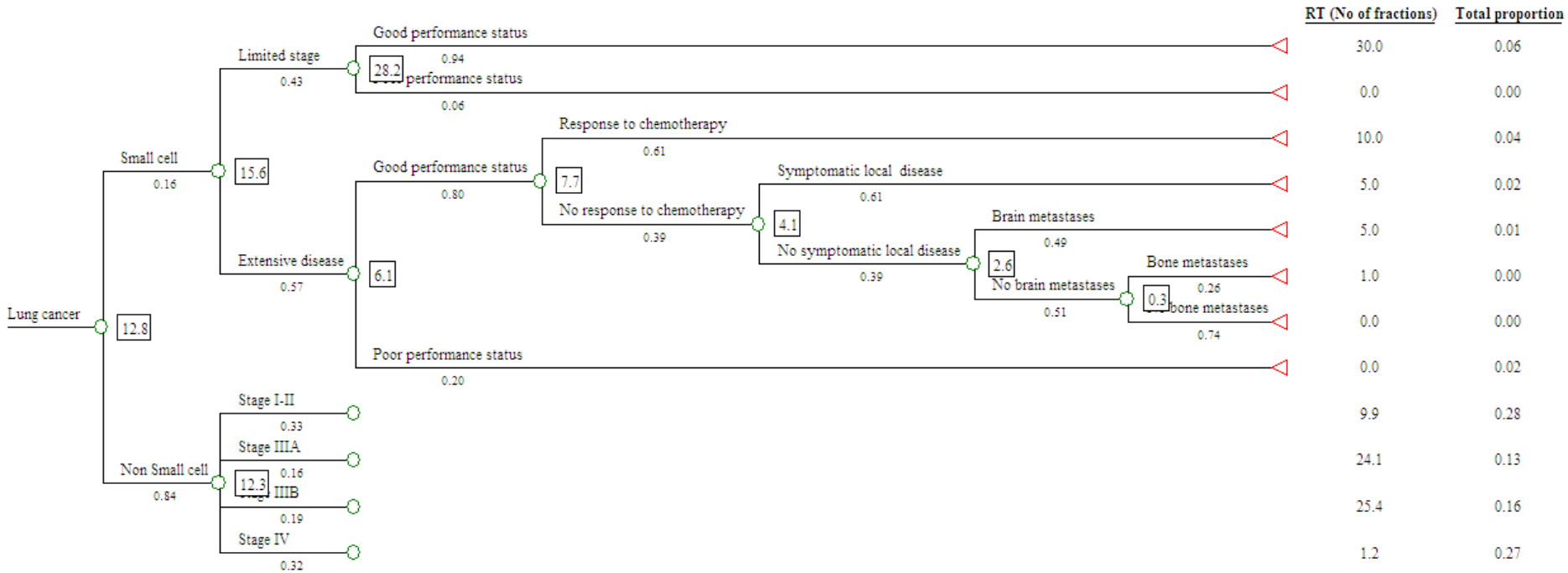

Figure 3. SCLC. Optimal fractionation tree

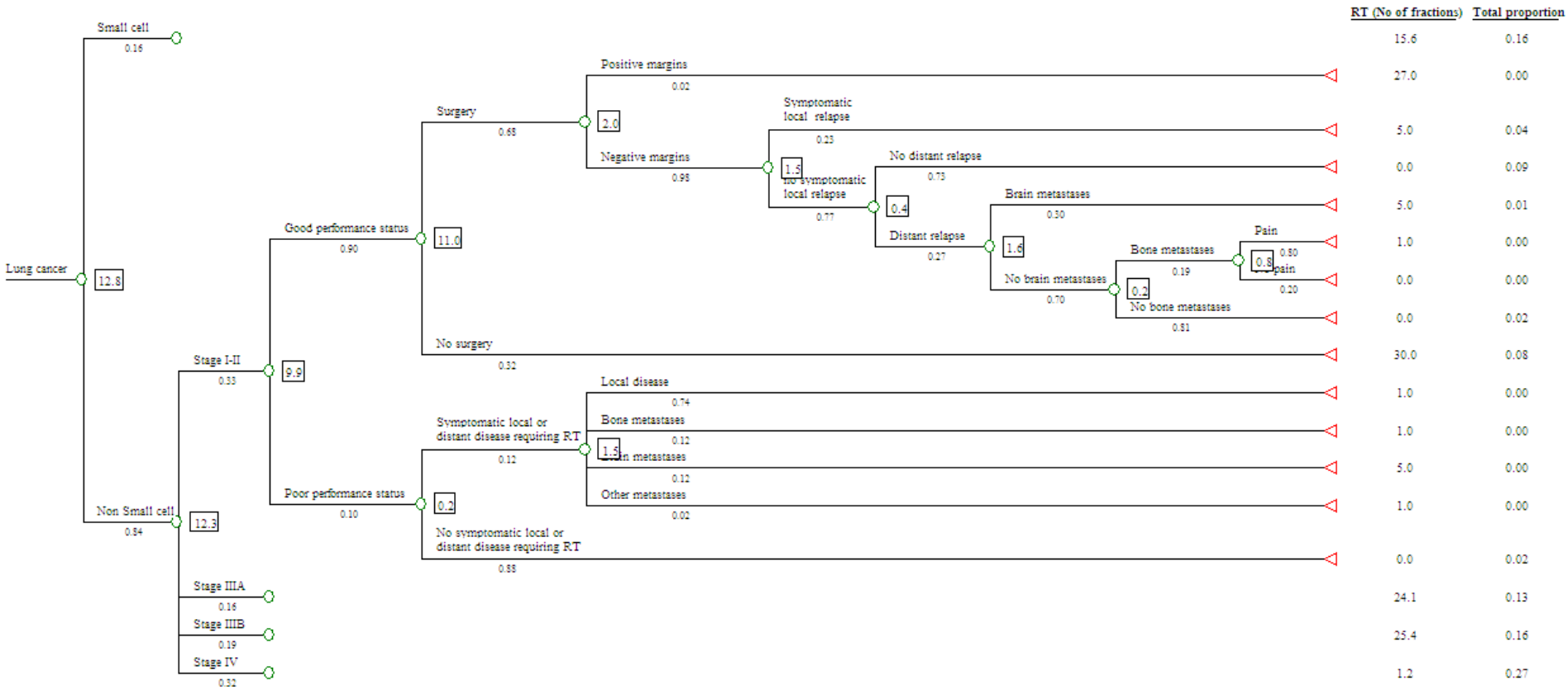

Figure 4. NSCLC stage I-II. Optimal fractionation tree

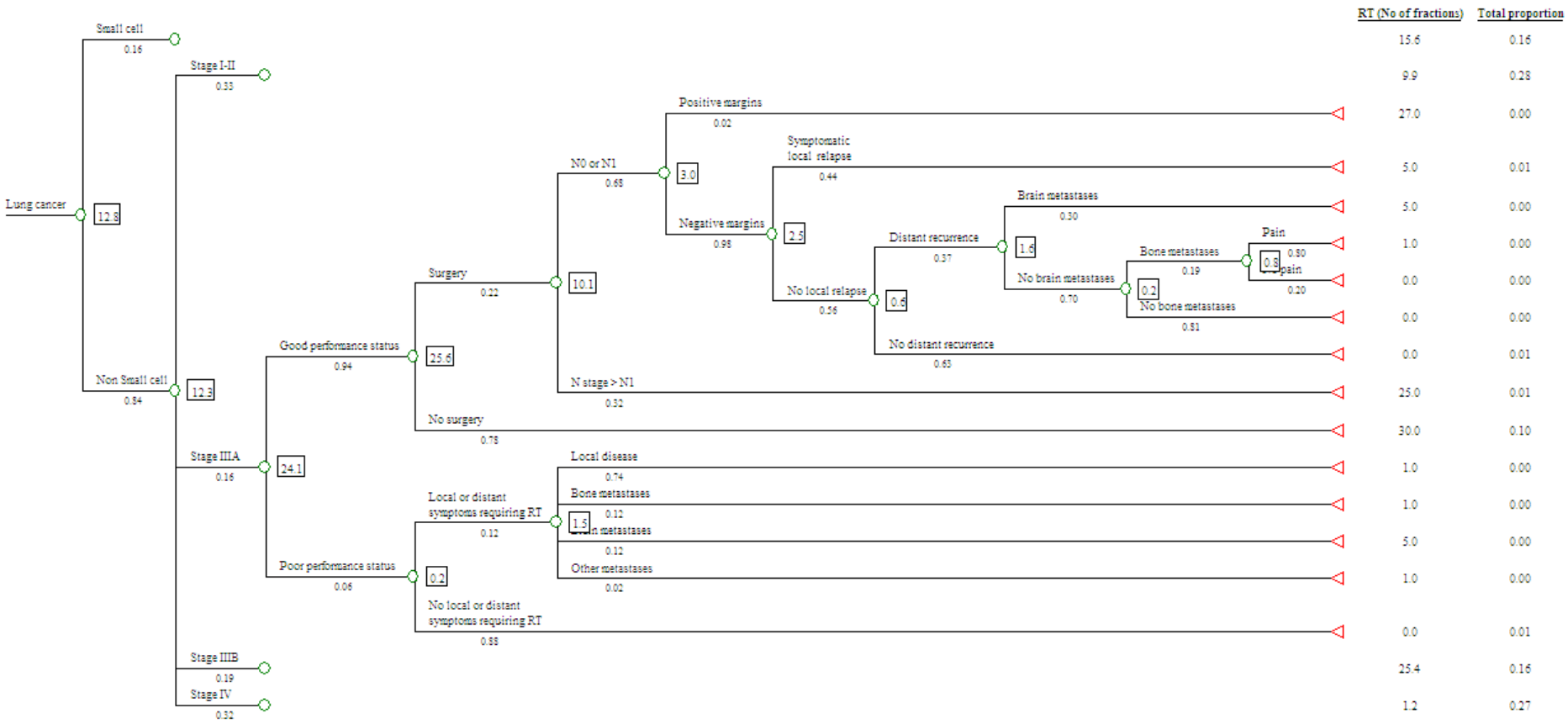

Figure 5. NSCLC stage IIIA. Optimal fractionation tree

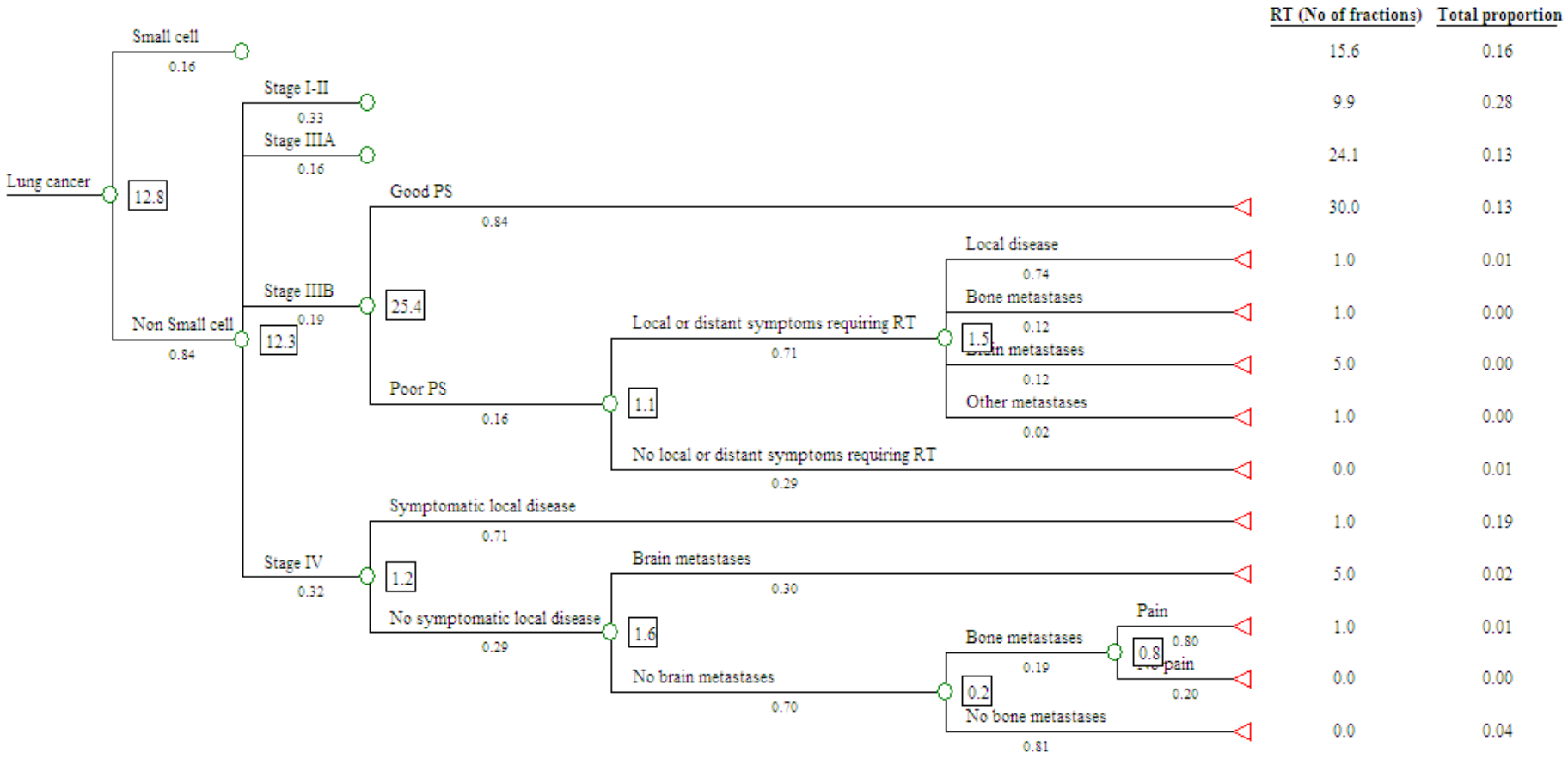

Figure 6. NSCLC stage IIIB-IV. Optimal fractionation tree

7.2 Mesothelioma

Mesothelioma

Mesothelioma constituted 0.6% of all cancers occurring in Australia in 2005 (16). It was not included in the original optimal radiotherapy utilisation model (1-2).

The following clinical practice guidelines for the management of mesothelioma were identified:

- NCCN clinical practice guidelines on malignant pleural mesothelioma (version 1.2011) (256)
- NCI PDQ guidelines on malignant mesothelioma (2010) (257)
- BC Cancer Agency mesothelioma management guidelines (2005) (258)
- Cancer Care Ontario guidelines on the role of radiation therapy in malignant pleural mesothelioma (2006) (259)

The BC Cancer Agency guidelines (258) state that patients with stage I mesothelioma are occasionally considered for extrapleural pneumonectomy, and that although some patients have been reported to achieve long-term survival with aggressive therapy, these cases are highly selected and it is unclear whether overall survival has been significantly altered by aggressive treatment. The NCCN guidelines (256) state that for patients with resectable disease who undergo extrapleural pneumonectomy, adjuvant radiotherapy can be recommended for patients with good performance status to improve local control. However, the NCI guidelines (257) state that adjuvant radiotherapy has not demonstrated improved survival. The BC Cancer Agency guidelines (258) state that the role of radical radiotherapy is limited by the large volume being treated, the surrounding structures and the requirement for delivery of a high dose. The Cancer Care Ontario guidelines (259) state that the lack of sufficient high quality evidence precludes definitive recommendations being made.

The NCCN guidelines (256) also state that radiotherapy can be used to prevent instrument-tract recurrence after pleural intervention. The Cancer Care Ontario guidelines (259) state that there is inconsistent evidence for the use of

prophylactic radiotherapy in this setting and a recommendation could not be made for this treatment.

In the palliative setting, the NCCN guidelines (256) state that radiotherapy is an effective treatment for relief of chest pain associated with mesothelioma. The NCI guidelines (257) state that radiotherapy has been shown to alleviate pain in the majority of patients treated, however, the duration of symptom control is short-lived. Similarly, the Cancer Care Ontario guidelines (259) state that palliative radiotherapy may offer short-term control of chest pain, however, long-term control has not been demonstrated to date.

According to the clinical guidelines, the role of radiotherapy in the adjuvant, prophylactic and palliative settings is not well established. It was therefore estimated that the optimal number of fractions for patients with mesothelioma would be 0.

Chapter 8 Lymphoma

Table 1. Lymphoma. Number of fractions of radiotherapy – Sources of evidence

Outcome no (utilisation model)	Clinical scenario (utilisation model)	Outcome no (fractionation model)	Clinical scenario (addition to fractionation model)	No of fractions	Range of no of fractions	Level of evidence	References	Notes	Proportion of all lymphoma patients
1	Hodgkin lymphoma, stage I-IIA	1	−	10	10−15	II	NHMRC guidelines (260) NCCN guidelines (261) NCI guidelines (262)	2	0.05
2	Hodgkin lymphoma, stage IIB-IV, < 60 years, bulky disease	2	−	15	15−20	II	NCCN guidelines (261)	3	0.01
4	Hodgkin lymphoma, stage IIB-IV, < 60 years, no bulky disease, complete response to chemotherapy, relapse, suitable for HDCT/BMT, residual disease	4	−	15	15−20	III	Mundt et al (263) Poen et al (264)	4	<0.01

Outcome no (utilisation model)	Clinical scenario (utilisation model)	Outcome no (fractionation model)	Clinical scenario (addition to fractionation model)	No of fractions	Range of no of fractions	Level of evidence	References	Notes	Proportion of all lymphoma patients
6	Hodgkin lymphoma, stage IIB-IV, < 60 years, no bulky disease, complete response to chemotherapy, relapse, not suitable for HDCT/BMT, relapse at nodal site	6	−	15	15–20	III	Mundt et al (263) Poen et al (264) Josting et al (265)	4	<0.01
8	Hodgkin lymphoma, stage IIB-IV, < 60 years, no bulky disease, partial response to chemotherapy	8	−	15	15−20	II	NCCN guidelines (261)	3	<0.01
9	Hodgkin lymphoma, stage IIB-IV, < 60 years, no bulky	9	−	15	15−20	II	NCCN guidelines (261)	3	<0.01

Outcome no (utilisation model)	Clinical scenario (utilisation model)	Outcome no (fractionation model)	Clinical scenario (addition to fractionation model)	No of fractions	Range of no of fractions	Level of evidence	References	Notes	Proportion of all lymphoma patients
	disease, progressive disease/stable disease with chemotherapy, residual disease after HDCT								
12	Hodgkin lymphoma, stage IIB-IV, > 60 years, no bulky disease, complete response, relapse at nodal site	12	−	15	15–20	III	Mundt et al (263) Poen et al (264) Josting et al (265)	4	<0.01
14	Hodgkin lymphoma, stage IIB-IV, > 60 years, no bulky disease, incomplete response	14	−	15	15−20	II	NCCN guidelines (261)	3	0.01
15	Hodgkin lymphoma,	15	−	15	15−20	II	NCCN guidelines (261)	3	<0.01

Outcome no (utilisation model)	Clinical scenario (utilisation model)	Outcome no (fractionation model)	Clinical scenario (addition to fractionation model)	No of fractions	Range of no of fractions	Level of evidence	References	Notes	Proportion of all lymphoma patients
	stage IIB-IV, > 60 years, bulky disease								
16	NHL, low grade, MALT, gastric, stage I-II, complete response to helicobacter eradication, relapse	16	−	12	12−15	II	NCCN guidelines (266)	5	<0.01
18	NHL, low grade, MALT, gastric, stage I-II, incomplete response to helicobacter eradication	18	−	12	12−15	II	NCCN guidelines (266)	5	<0.01
20	NHL, low grade, MALT, not gastric, stage I-II	20	−	12	12−15	II	NCCN guidelines (266)	5	0.03
22	NHL, low grade,	22	−	12	12−18	II	NHMRC guidelines	6	0.08

Outcome no (utilisation model)	Clinical scenario (utilisation model)	Outcome no (fractionation model)	Clinical scenario (addition to fractionation model)	No of fractions	Range of no of fractions	Level of evidence	References	Notes	Proportion of all lymphoma patients
	non-MALT, stage I-II						(260) NCCN guidelines (266)		
24	NHL, low grade, non-MALT, stage III-IV, require treatment at presentation, complete response to chemotherapy, relapse, partial/no response to second line chemotherapy	24	–	12	–	II	Lowry et al (267)	7	0.02
27	NHL, low grade, non-MALT, stage III-IV, require treatment at presentation, incomplete response to initial chemotherapy,	27	–	12	–	II	Lowry et al (267)	7	0.02

Outcome no (utilisation model)	Clinical scenario (utilisation model)	Outcome no (fractionation model)	Clinical scenario (addition to fractionation model)	No of fractions	Range of no of fractions	Level of evidence	References	Notes	Proportion of all lymphoma patients
	partial/no response to second line chemotherapy								
29	NHL, low grade, non-MALT, stage III-IV, suitable for initial surveillance, require treatment for nodal disease, complete response to initial chemotherapy, relapse, partial/no response to second line chemotherapy	29	−	12	−	II	Lowry et al (267)	7	0.01
32	NHL, low grade non-MALT, stage III-IV, suitable for initial surveillance, require	32	−	12	−	II	Lowry et al (267)	7	<0.01

Outcome no (utilisation model)	Clinical scenario (utilisation model)	Outcome no (fractionation model)	Clinical scenario (addition to fractionation model)	No of fractions	Range of no of fractions	Level of evidence	References	Notes	Proportion of all lymphoma patients
	treatment for nodal disease, incomplete response to initial chemotherapy, partial/no response to second line chemotherapy								
35	NHL, intermediate grade, stage I-II	35	−	15	15−20	II	NHMRC guidelines (260) NCCN guidelines (266)	8	0.3
37	NHL, intermediate grade, stage III-IV, complete response to chemotherapy, age < 70 years, relapse with 'bulky' disease	37	−	20	−	II	Philip et al (268)	9	0.01
40	NHL, intermediate	40	−	20	−	II	Philip et al (268)	9	<0.01

Outcome no (utilisation model)	Clinical scenario (utilisation model)	Outcome no (fractionation model)	Clinical scenario (addition to fractionation model)	No of fractions	Range of no of fractions	Level of evidence	References	Notes	Proportion of all lymphoma patients
	grade, stage III/IV, complete response to chemotherapy, age > 70 years, relapse with 'bulky' disease								
42	NHL , intermediate grade, stage III/IV, incomplete response to chemotherapy, age < 70 years, with 'bulky' disease	42	−	20	−	II	Aviles et al (269)	10	0.03
44	NHL, intermediate grade, stage III/IV, incomplete response to chemotherapy, age > 70 years	44	−	20	−	II	Aviles et al (269)	10	0.06
45	NHL, high grade,	45	−	12	−	II	Laver et al (270)	11	0.01

Outcome no (utilisation model)	Clinical scenario (utilisation model)	Outcome no (fractionation model)	Clinical scenario (addition to fractionation model)	No of fractions	Range of no of fractions	Level of evidence	References	Notes	Proportion of all lymphoma patients
	lymphoblastic lymphoma, adult, prophylactic cranial irradiation								
48	NHL, mycosis fungoides, stage I-II, complete response to PUVA/topical agents, relapse	48	−	12	12−36	III	NCCN guidelines (266)	12	<0.01
50	NHL, mycosis fungoides, stage I-II, incomplete response to PUVA/topical agents	50	−	12	12−36	III	NCCN guidelines (266)	12	<0.01
51	NHL, mycosis fungoides, stage III-IV	51	−	5	5−36	−	−	13	<0.01

Proportion of all lymphoma patients in whom radiotherapy is recommended	**0.65 (65%)**
Proportion of all cancer patients = 0.65 x 0.04 =	**0.026 (2.6%)**
Average number of fractions per lymphoma patient	**9.4**
Average number of fractions per treatment course = 9.4/0.65 =	**14.5**

Key to abbreviations in lymphoma decision tree and tables

NHMRC – National Health and Medical Research Council

NCCN – National Comprehensive Cancer network

NCI – National Cancer Institute

HDCT/BMT – high dose chemotherapy/ bone marrow transplant

NHL – Non-Hodgkin's lymphoma

MALT – Mucosa-associated lymphoid tissue

PUVA – Psoralen and ultraviolet A

Table 2. Lymphoma. The incidence of attributes used to define number of radiotherapy fractions

Key	Population or subpopulation of interest	Attribute	Proportion of populations with this attribute	Quality of Information	References	Notes
A	All registry cancers	Lymphoma	0.04	α	AIHW (16)	1

Lymphoma

The optimal radiotherapy fractionation model for lymphoma was based on the optimal radiotherapy utilisation model for lymphoma (1, 271).

Treatment Guidelines

The following clinical practice guidelines for the management of lymphoma were identified:

- NHMRC clinical practice guidelines for the diagnosis and management of lymphoma (2005) (260)
- NCCN clinical practice guidelines on Hodgkin lymphoma (version 2.2010) (261)
- NCCN clinical practice guidelines on non-Hodgkin's lymphomas (version 1.2011) (266)
- NCI PDQ guidelines on adult Hodgkin lymphoma (2010) (262)
- NCI PDQ guidelines on adult non-Hodgkin lymphoma (2010) (272)
- NCI PDQ guidelines on mycosis fungoides and the Sézary Syndrome (2010) (273)
- BC Cancer Agency cancer management guidelines on lymphoma (2010) (274)

Explanatory Notes for Tables 1 and 2

1. Incidence of lymphoma

Lymphoma constituted 4.2% of all cancers occurring in Australia in 2005 (16).

2. Stage I-IIA Hodgkin lymphoma

The NHMRC guidelines (260) recommend radiotherapy after 4 cycles of ABVD chemotherapy (adriamycin, bleomycin, vinblastine, dacarbazine) for early stage

favourable disease and after 6 cycles of ABVD chemotherapy for early stage unfavourable disease. No specific dose fractionation schedules are recommended, but the guidelines state that radiotherapy doses of 30 Gy or less may be sufficient after chemotherapy.

The NCCN guidelines on Hodgkin lymphoma (261) recommend a dose of 20 to 30 Gy in patients with favourable disease, and 30 to 36 Gy in patients with unfavourable disease, after treatment with ABVD chemotherapy. The NCI guidelines on adult Hodgkin lymphoma (262) recommend a dose of 20 to 30 Gy for both favourable and unfavourable disease.

The German Hodgkin's Lymphoma Study Group (GHSG) reported on a randomised controlled study (HD 10) comparing 2 with 4 cycles of ABVD chemotherapy and 20 Gy with 30 Gy of radiotherapy in 1370 patients with early stage favourable disease (275). There were no significant differences in freedom from treatment failure or overall survival between the dose of 20 Gy and 30 Gy. The GHSG also reported on a randomised controlled study (HD 11) comparing 4 cycles of ABVD chemotherapy with 4 cycles of BEACOPP chemotherapy (bleomycin, etoposide, doxorubicin, cyclophosphamide, vincristine, procarbazine, and prednisone) and 20 Gy with 30 Gy of radiotherapy in 1395 patients with early stage unfavourable disease (276). The results showed that after 4 cycles of BEACOPP, 20 Gy was not inferior to 30 Gy in terms of freedom from treatment failure, but inferiority of 20 Gy could not be excluded after 4 cycles of ABVD. The authors concluded that 4 cycles of ABVD chemotherapy should be followed by 30 Gy of radiotherapy.

In this model, the dose fractionation schedule, 20 Gy in 10 fractions, was used for patients with stage I-IIA disease. A sensitivity analysis was performed to assess the impact of the range of number of fractions (10 to 15 fractions) on the average number of fractions per lymphoma patient.

3. Stage IIB-IV Hodgkin lymphoma, initial bulky disease or incomplete response after chemotherapy

The NHMRC guidelines (260) state that in bulky sites and in sites that fail to achieve complete remission after chemotherapy, radiotherapy can improve freedom from progression in advanced Hodgkin lymphoma. No specific dose fractionation schedules are recommended. The NCCN guidelines on Hodgkin lymphoma (261) recommend a dose of 30 to 40 Gy after chemotherapy.

Both guidelines make reference to the Southwest Oncology Group (SWOG) study in which 278 patients with stage III-IV Hodgkin lymphoma who achieved complete response to chemotherapy were randomised to radiotherapy (20 Gy) or no radiotherapy. No significant differences in remission duration or overall survival were observed in the intent-to-treat-analysis, but sub-set analysis showed prolonged disease-free survival in the radiotherapy arm, especially in patients with initial bulky disease (277). The guidelines also make reference to the EORTC study in which 739 patients with stage III-IV Hodgkin lymphoma were treated with chemotherapy. Patients in complete remission after chemotherapy were randomised to radiotherapy (24 Gy) or no further treatment, whereas all patients in partial remission received radiotherapy (30 to 40 Gy). This study showed that the 8-year event-free survival and overall survival rates in patients with partial remission were similar to those of patients in complete remission, suggesting a definite role for radiotherapy in these patients (278-279).

In this model, the dose fractionation schedule, 30 Gy in 15 fractions, was used for patients with stage IIB-IV Hodgkin lymphoma with initial bulky disease or incomplete response after chemotherapy. A sensitivity analysis was performed to assess the impact of the range of number of fractions (15 to 20 fractions) on the average number of fractions per lymphoma patient.

4. Stage IIB-IV Hodgkin lymphoma, relapse after initial complete response to chemotherapy

For patients who relapse after initial complete response to chemotherapy, the NHMRC guidelines (260) state that radiotherapy for residual masses after high-dose chemotherapy and autologous stem cell transplant results in improved

progression-free survival (263-264). Mundt et al (263) reported on 54 patients with relapsed or refractory Hodgkin lymphoma who underwent high dose chemotherapy and autologous bone marrow or stem cell transplant. Twenty patients received radiotherapy, with the majority receiving 30 to 40 Gy. Patients who received radiotherapy had a better progression-free survival than those who did not. Moreover, the patients who converted to a complete response after radiotherapy had similar progression-free and cause-specific survival as those patients achieving a complete response with high dose chemotherapy alone.

Poen et al (264) reported on 100 patients with relapsed or refractory Hodgkin lymphoma who were treated with high dose chemotherapy and autologous bone marrow transplant. Twenty-four patients received radiotherapy (dose range 12.5 to 45 Gy, median dose 30 Gy). This study showed that radiotherapy was associated with an improved freedom-from-relapse rate.

For patients who relapse following initial chemotherapy with only limited nodal disease, the NHMRC guidelines (260) and the NCI guidelines on adult Hodgkin lymphoma (262) state that radiotherapy with or without additional chemotherapy may provide long-term survival for about 50% of these highly selected patients. Josting et al (265) reported on 100 patients who received salvage radiotherapy alone for progressive or relapsed Hodgkin lymphoma (dose range 15 to 50 Gy, median dose 40 Gy). Seventy-seven patients achieved a complete remission. The 5-year overall survival rate was 51%.

In this model, the dose fractionation schedule, 30 Gy in 15 fractions, was used for patients with stage IIB-IV Hodgkin lymphoma who relapse after initial complete response to chemotherapy. A sensitivity analysis was performed to assess the impact of the range of number of fractions (15 to 20 fractions) on the average number of fractions per lymphoma patient.

5. Early stage mucosa-associated lymphoid tissue (MALT) lymphoma

The NCCN guidelines on non-Hodgkin's lymphoma (NHL) (266) recommend a dose of 30 Gy for gastric MALT lymphoma, and 24 to 30 Gy for non-gastric

MALT lymphoma. Lowry et al (267) reported on 289 patients with low grade NHL who were randomised to receive 40 to 45 Gy in 20 to 23 fractions or 24 Gy in 12 fractions. Fifty-six of these patients (19%) had marginal zone lymphoma. There was no difference in overall response rate, progression-free or overall survival between the two arms.

The dose fractionation schedule, 24 Gy in 12 fractions, was used in the model for patients with early stage MALT lymphoma. A sensitivity analysis was performed to assess the impact of the range of number of fractions (12 to 15 fractions) on the average number of fractions per lymphoma patient.

6. Stage I-II low grade NHL (non-MALT lymphoma)

The NHMRC guidelines (260) recommend a dose of 30 to 36 Gy. The guidelines state that there are no convincing data for a significant dose response relationship beyond 30 to 36 Gy, but doses < 30 Gy are associated with a higher local recurrence (280). The NCCN guidelines (266) recommend a dose of 24 to 30 Gy, and 36 Gy for bulky or slowly regressing disease. Lowry et al (267) reported on 289 patients with low grade NHL who were randomised to receive 40 to 45 Gy in 20 to 23 fractions or 24 Gy in 12 fractions. There was no difference in overall response rate, progression-free or overall survival between the two arms.

The dose fractionation schedule, 24 Gy in 12 fractions, was used in the model. A sensitivity analysis was performed to assess the impact of the range of number of fractions (12 to 18 fractions) on the average number of fractions per lymphoma patient.

7. Stage III-IV low grade NHL (non-MALT lymphoma), partial response or no response to second line chemotherapy

No specific dose fractionation schedules for palliative radiotherapy for these patients are recommended in the guidelines. In the randomised study reported by Lowry et al (267) discussed above, 289 patients with low grade NHL had a

total of 316 sites treated. Of these, 102 sites (32%) were treated with palliative intent. The dose fractionation schedule, 24 Gy in 12 fractions, was used in the model, as there was no difference in overall response rate and survival between the two dose fractionation schedules (24 Gy in 12 fractions versus 40 to 45 Gy in 20 to 23 fractions).

8. Stage I-II intermediate grade NHL

For patients with non-bulky stage I intermediate grade NHL with normal lactate dehydrogenase (LDH) and ECOG ≤ 1, the NHMRC guidelines (260) recommend treatment with 3 cycles of CHOP (cyclophosphamide, adriamycin, vincristine and prednisone) chemotherapy and radiotherapy to a dose of 30 to 40 Gy. Given in 2 Gy per fraction, this dose range is delivered over 15 to 20 fractions. For patients with bulky stage I or stage II disease, high LDH, ECOG ≥ 2 and/or 3 or more disease sites, the NHMRC guidelines (260) recommend treatment with 6 to 8 cycles of CHOP chemotherapy followed by the same dose of radiotherapy. The NCCN guidelines (266) recommend a dose of 30 to 36 Gy.

Lowry et al (267) reported on 476 patients with intermediate grade NHL who were randomised to receive 40 to 45 Gy in 20 to 23 fractions or 30 Gy in 15 fractions as part of combined modality treatment. There was no difference in overall response rate, progression-free or overall survival between the two arms.

The dose fractionation schedule, 30 Gy in 15 fractions, was used in the model. A sensitivity analysis was performed to assess the impact of the range of number of fractions (15 to 20 fractions) on the average number of fractions per lymphoma patient.

9. Stage III-IV intermediate grade NHL, relapse after initial complete response to CHOP chemotherapy

The NCCN guidelines (266) state that for patients who experience relapse following an initial complete response and who are candidates for high-dose

chemotherapy should be treated with second line chemotherapy, and those who respond to chemotherapy should be considered for further consolidation with high dose therapy and stem cell support. Radiotherapy can be given before or after stem cell rescue to sites with prior positive disease. No specific dose fractionation schedules are recommended in these guidelines.

Philip et al (268) reported on the Parma trial, a randomised study of 215 patients with relapsed intermediate and high grade lymphoma. One hundred and nine patients who responded to two cycles of chemotherapy were randomised to receive further chemotherapy and radiotherapy or autologous bone marrow transplant and radiotherapy. This study showed a significant improvement in event-free survival and overall survival in the bone marrow transplant arm. For patients in the transplant arm, the dose fractionation schedule 26 Gy in 20 fractions (1.3 Gy per fraction delivered twice daily) was used. For patients in the chemotherapy arm, the dose fractionation schedule 35 Gy in 20 fractions (1.75 Gy per fraction) was used.

A radiotherapy course of 20 fractions was used in the model.

10. Stage III-IV intermediate grade NHL, incomplete response to chemotherapy

No specific dose fractionation schedules are recommended in the guidelines. Aviles et al (269) reported on a randomised controlled study of 166 patients with diffuse large B-cell lymphoma who had residual disease after chemotherapy. Patients were randomised to radiotherapy (30 Gy in 20 fractions) or no radiotherapy. There was a significant improvement in overall survival and progression-free survival in the radiotherapy arm.

The dose fractionation schedule, 30 Gy in 20 fractions, was used in the model.

11. PCI for patients with lymphoblastic lymphoma

The NHMRC guidelines (260) recommend that adults with lymphoblastic lymphoma should be treated with a regimen designed for therapy for acute lymphoblastic leukaemia, and that treatment must include central nervous system prophylaxis. The guidelines also state that radiotherapy and chemotherapy give equivalent results in terms of survival, but in one study, irradiated patients had significantly fewer episodes of central nervous system relapse (270). In this study of children with high risk acute lymphoblastic leukaemia, patients received a dose of PCI of either 18 Gy or 24 Gy. No specific dose fractionation schedules are recommended in the guidelines.

The dose fractionation schedule, 18 Gy in 12 fractions (1.5 Gy per fraction), was used in the model for patients with lymphoblastic lymphoma receiving PCI.

12. Stage I-II mycosis fungoides treated with psoralen and ultraviolet A (PUVA) or topical agents, incomplete response or relapse after initial complete response

The NCCN guidelines (266) recommend local radiotherapy to a dose of 24 to 36 Gy for localised disease, particularly unilesional disease. The guidelines make reference to the study reported by Wilson et al (281), in which 21 patients with stage IA mycosis fungoides were treated with superficial radiation. The median dose was 20 Gy (range 6 to 40 Gy), with 17 patients receiving ≥ 20 Gy. The actuarial disease-free survival for the entire group at 5 and 10 years was 75 and 64% respectively. For those treated with doses ≥ 20 Gy, the disease free survival was 91%. The authors recommended that patients should be treated to a dose of greater than 20 Gy.

The NCI guidelines on mycosis fungoides and the Sézary syndrome (273) also recommend local radiotherapy as a treatment option for early stage mycosis fungoides, and state that long-term disease-free survival can be achieved in patients with unilesional mycosis fungoides treated with local radiotherapy, making reference to the study reported by Micaily et al (282). In this series of 325 patients with mycosis fungoides, 18 patients had a single lesion and were treated with local radiotherapy, 30.6 Gy in 17 fractions (1.8 Gy per fraction).

Complete response rate was 100%, 10-year overall survival was 100% and 10-year relapse-free survival was 86.2%.

The NCI guidelines (273) and NCCN guidelines (266) also recommend total skin electron beam therapy (TSEBT) as a treatment option for early stage mycosis fungoides. The NCCN guidelines (266) recommend a dose of 30 to 36 Gy. The guidelines make reference to studies in which patients received doses ranging from 30 Gy in 15 fractions to 36 Gy in 36 fractions (283-285).

In this model, the shortest dose fractionation schedule recommended in the guidelines, 24 Gy in 12 fractions, was used. A sensitivity analysis was performed to assess the impact of the range of number of fractions (12 to 36 fractions) on the average number of fractions per lymphoma patient.

13. Stage III-IV mycosis fungoides

The NCI guidelines on mycosis fungoides and the Sezary syndrome (273) recommend TSEBT and local radiotherapy to bulky or symptomatic skin disease as palliative treatment options for advanced stage mycosis fungoides. No specific dose fractionation schedules for local radiotherapy are recommended in the guidelines and there is no high level evidence to suggest the optimal dose fractionation schedule. For local radiotherapy, a commonly used palliative dose fractionation schedule, 20 Gy in 5 fractions, was used in the model. For TSEBT, the same dose range as for early stage mycosis fungoides was used in the model (see note 12).

Therefore, in this model, the dose fractionation schedule, 20 Gy in 5 fractions, was used for patients with advanced stage mycosis fungoides. A sensitivity analysis was performed to assess the impact of the range of number of fractions (5 to 36 fractions) on the average number of fractions per lymphoma patient.

Sensitivity Analysis

The optimal number of fractions per lymphoma patient was 9.4.

As discussed by Delaney et al (1, 271), there was uncertainty regarding the data on the proportion of patients with stage IIB-IV Hodgkin lymphoma over the age of 60 (0.2 to 0.37), patients presenting with gastric MALT lymphoma who respond to Helicobacter pylori therapy (0.56 to 0.81) and patients with stage III-IV low grade NHL who respond to chemotherapy (0.38 to 0.65), because of different proportions reported in the literature.

A range of number of fractions was considered appropriate for radiotherapy for stage I-IIA Hodgkin lymphoma (10 to 15 fractions), stage IIB-IV Hodgkin lymphoma with initial bulky disease or incomplete response after chemotherapy (15 to 20 fractions), stage IIB-IV Hodgkin lymphoma with relapse after initial complete response to chemotherapy (15 to 20 fractions), early stage MALT lymphoma (12 to 15 fractions), stage I-II low grade NHL (12 to 18 fractions), stage I-II intermediate grade NHL (15 to 20 fractions), stage I-II mycosis fungoides (12 to 36 fractions) and stage III-IV mycosis fungoides (5 to 36 fractions).

To assess the impact of these uncertainties on the average number of radiotherapy fractions per lymphoma patient, a one-way sensitivity analysis was performed for these variables. The impact of these variables on the average number of radiotherapy fractions is illustrated by a tornado diagram (Fig. 1). The average number of radiotherapy fractions per lymphoma patient varied between 9.4 and 10.9. The optimal fractionation tree for lymphoma is shown in Figs. 2-6.

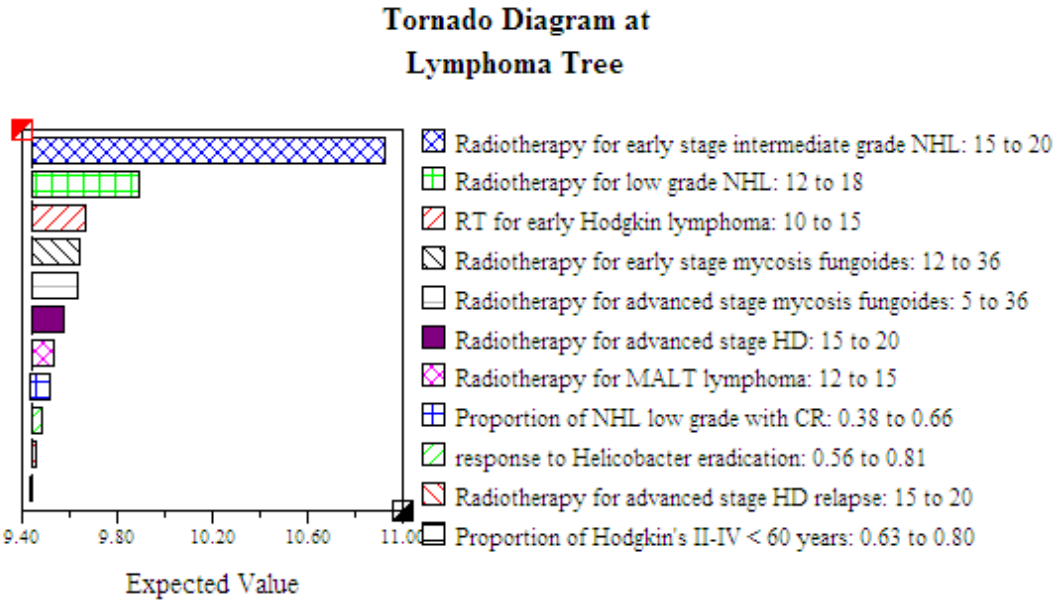

Figure 1. Lymphoma. Sensitivity analysis

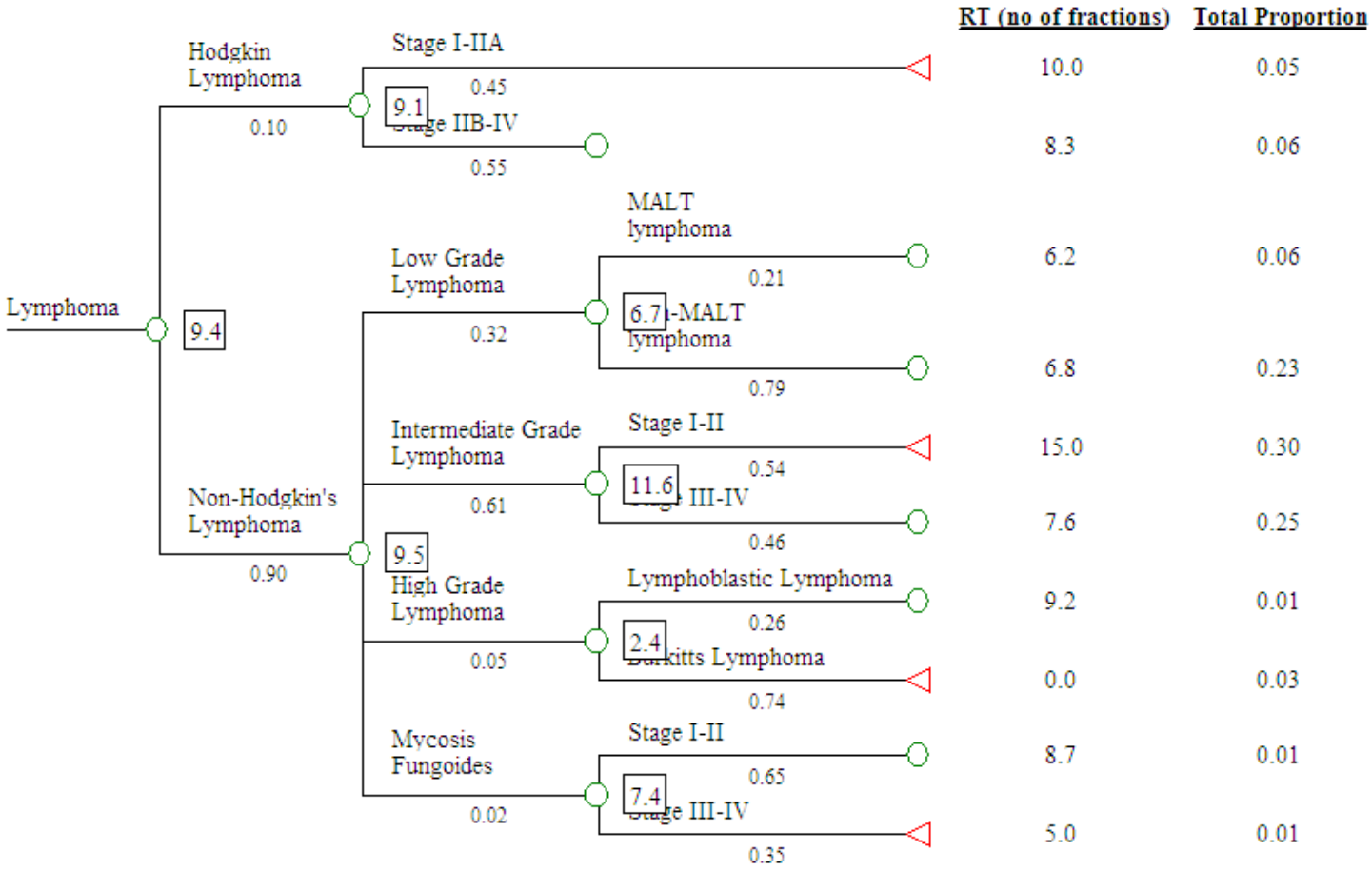

Figure 2. Lymphoma. Optimal fractionation tree

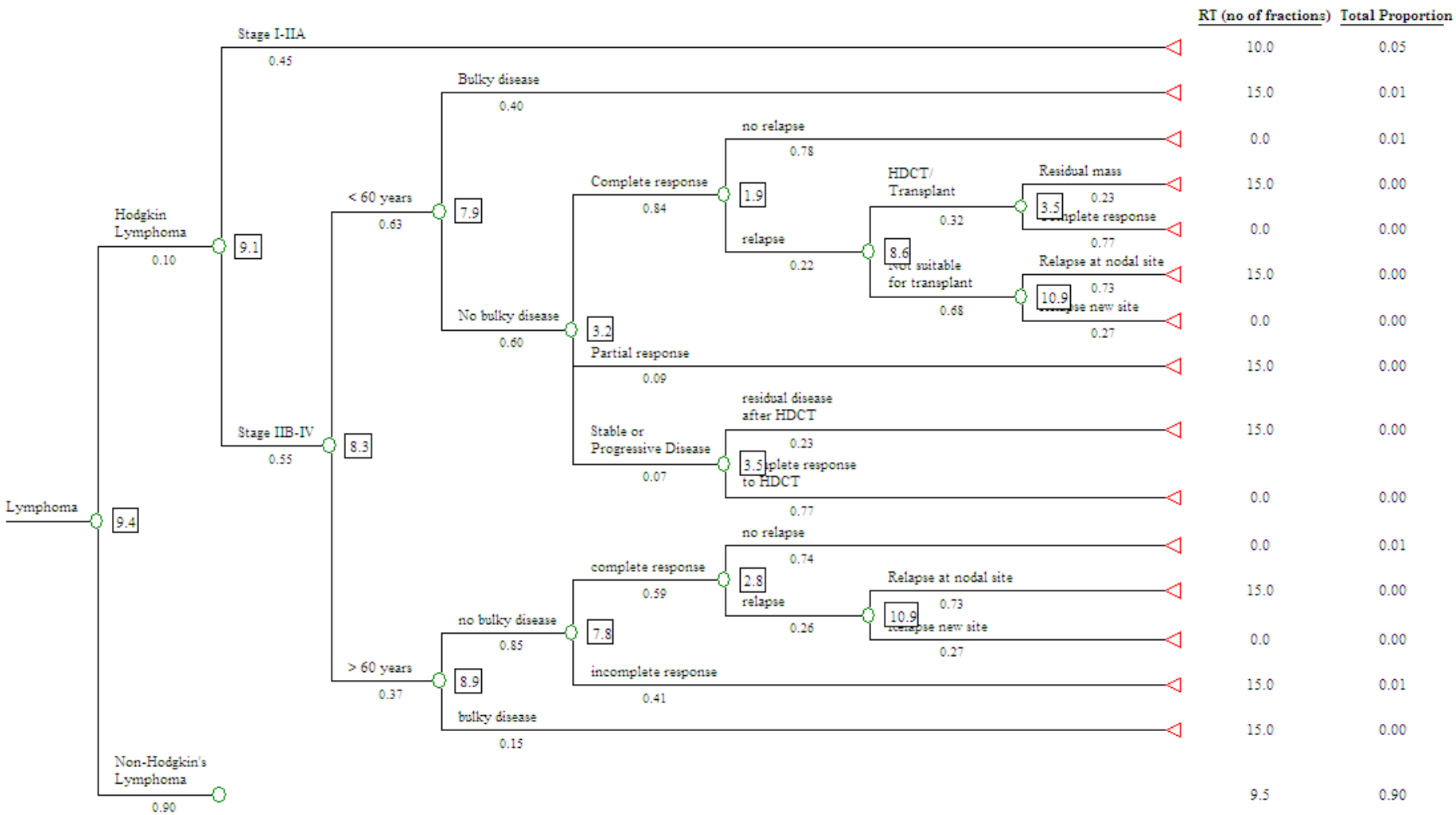

Figure 3. Hodgkin lymphoma. Optimal fractionation tree

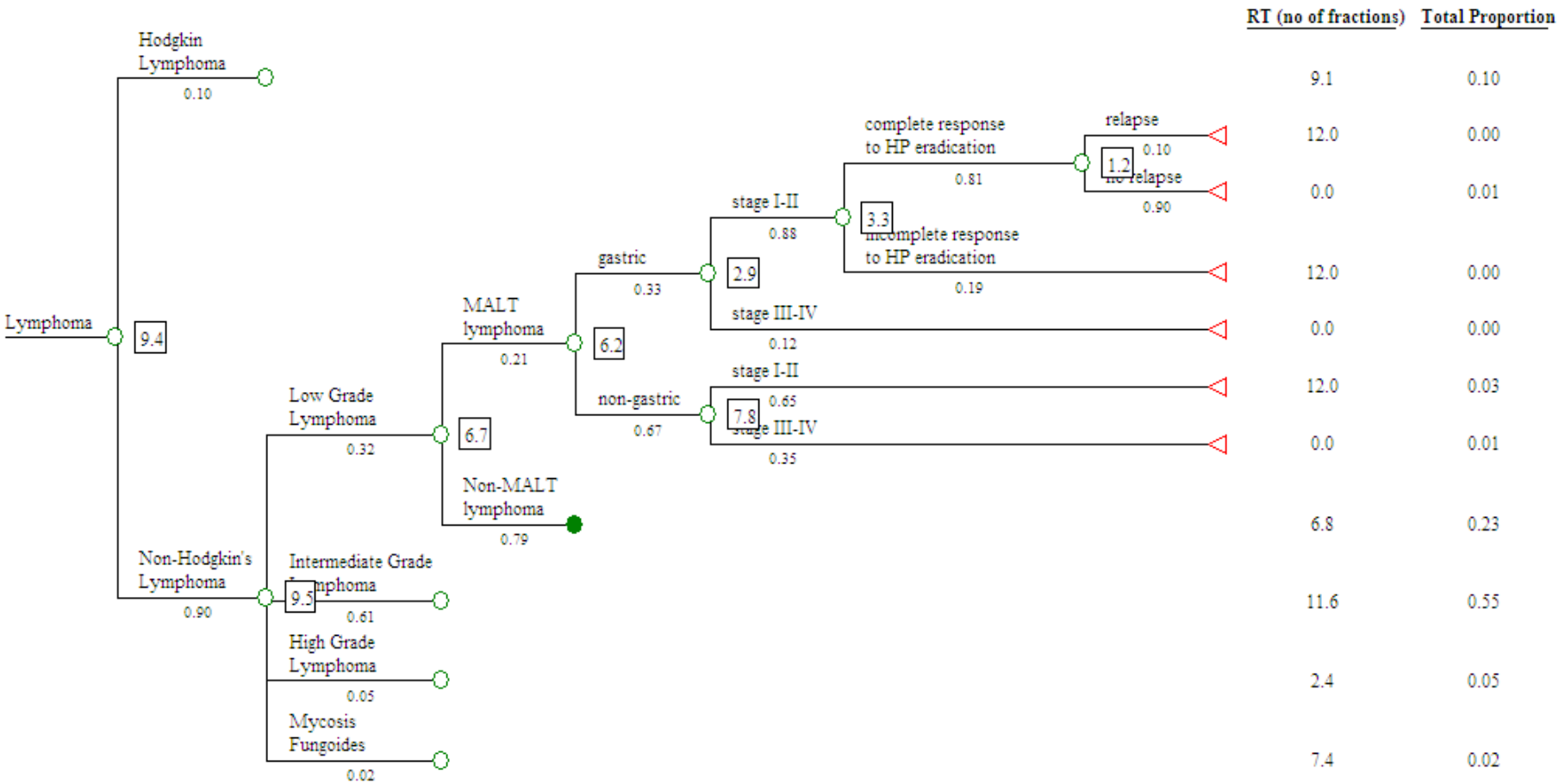

Figure 4. Low grade NHL (MALT lymphoma). Optimal fractionation tree

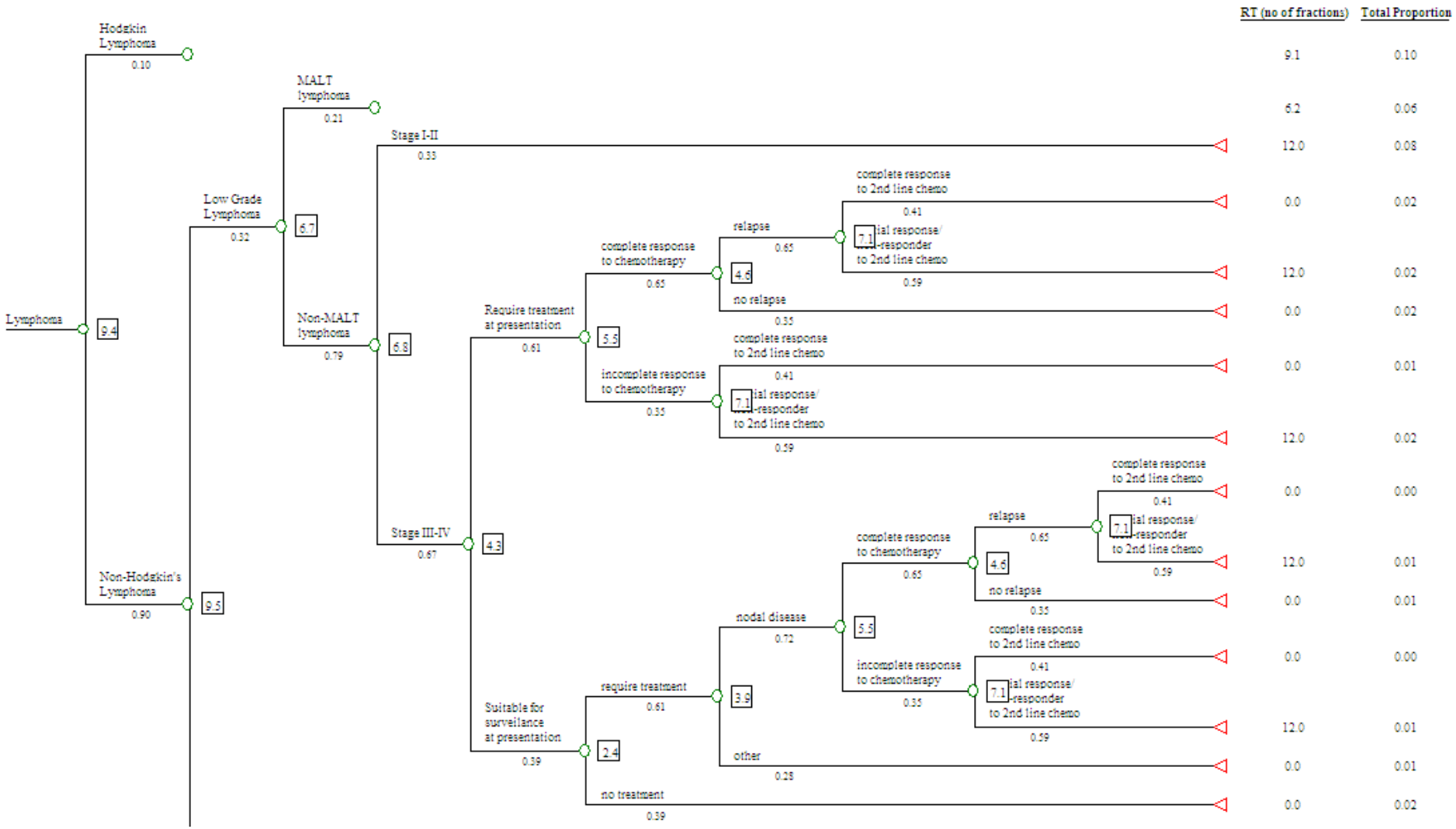

Figure 5. Low grade NHL (non-MALT lymphoma). Optimal fractionation tree

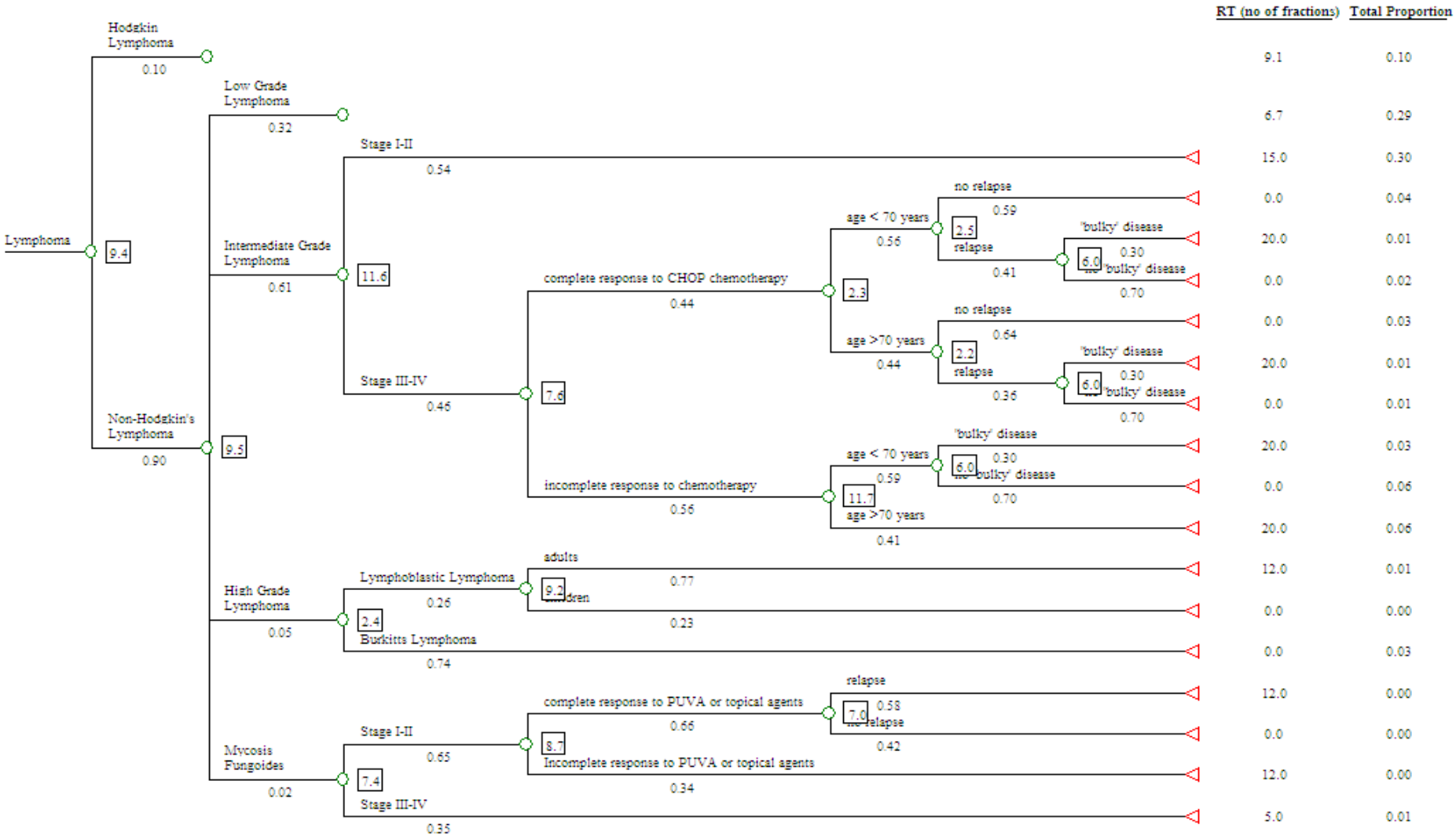

Figure 6. NHL (intermediate grade, high grade, mycosis fungoides). Optimal fractionation tree

Chapter 9 Gynaecological Cancer

9.1 Cervical Cancer

Table 1. Cervical Cancer. Number of fractions of radiotherapy – Sources of evidence

Outcome no (utilisation model)a	Clinical scenario (utilisation model)	Outcome no (fractionation model)	Clinical scenario (addition to fractionation model)	No of fractions	Range of no of fractions	Level of evidence	References	Notes	Proportion of all cervical cancer patients
2	Stage IB/IIA, good PS, non-bulky disease, positive lymph nodes	2	−	23	23−30	II	GMCT guidelines (286) NCCN guidelines (287) NCI guidelines (288) BCCA guidelines (289)	2	0.06
3	Stage IB/IIA, good PS, non-bulky disease, negative lymph nodes, close or positive margins	3	−	23	23−30	II	GMCT guidelines (286) NCCN guidelines (287) NCI guidelines (288) BCCA guidelines (289)	2	0.01
4	Stage IB/IIA, good PS, non-bulky disease, negative lymph nodes, negative margins, high risk for local	4	−	23	23−30	II	GMCT guidelines (286) NCCN guidelines (287) NCI guidelines (288) BCCA guidelines (289)	2	0.03

Outcome no (utilisation model)a	Clinical scenario (utilisation model)	Outcome no (fractionation model)	Clinical scenario (addition to fractionation model)	No of fractions	Range of no of fractions	Level of evidence	References	Notes	Proportion of all cervical cancer patients
	failure (GOG score>120)								
5	Stage IB/IIA, good PS, non-bulky disease, negative lymph nodes, negative margins, not high risk (GOG score<120), local recurrence	5	Isolated local recurrence, good PS	33	25−39	IV	Thomas et al (290) Thomas et al (291) Ijaz et al (292) Larson et al (293) Maneo et al (294)	7	<0.01
		6	Isolated local recurrence, poor PS	2	1−3	IV	Ijaz et al (292) Larson et al (293)	8	<0.01
		7	Local and distant recurrence	2	1−3	IV	Ijaz et al (292) Larson et al (293)	8	<0.01
6	Stage IB/IIA, good PS, non-bulky disease, negative lymph nodes, negative margins,	8	−	5	5−10	II	RCR guidelines (18)	10	<0.01

Outcome no (utilisation model)a	Clinical scenario (utilisation model)	Outcome no (fractionation model)	Clinical scenario (addition to fractionation model)	No of fractions	Range of no of fractions	Level of evidence	References	Notes	Proportion of all cervical cancer patients
	not high risk (GOG score<120), no local recurrence, distant recurrence, brain metastases								
7	Stage IB/IIA, good PS, non-bulky disease, negative lymph nodes, negative margins, not high risk (GOG score<120), no local recurrence, distant recurrence, no brain metastases, painful bone metastases	9	−	1	1−5	I	RCR guidelines (18)	11	<0.01
11	Stage IB/IIA, good	13	−	25	20−28	II	NCCN guidelines (287)	4	0.10

Outcome no (utilisation model)a	Clinical scenario (utilisation model)	Outcome no (fractionation model)	Clinical scenario (addition to fractionation model)	No of fractions	Range of no of fractions	Level of evidence	References	Notes	Proportion of all cervical cancer patients
	PS, bulky disease						RCR publication (18)		
12	Stage IB/IIA, poor performance status	14	−	2	1−3	IV	Onsrud et al (295)	5	0.02
13	Stage IIB-IVA	15	Good PS	25	20−28	II	NCCN guidelines (287) RCR publication (18)	4	0.25
		16	Poor PS	2	1−3	IV	Onsrud et al (295)	5	0.01
14	Stage IVB	17	Brain metastases	5	5−10	II	RCR guidelines (18)	10	0.01
		18	No brain metastases	2	1−3	IV	Onsrud et al (295)	5	0.08

Proportion of all cervical cancer patients in whom radiotherapy is recommended	**0.58 (58%)**
Proportion of all cancer patients = 0.58 x 0.007 =	**0.004 (0.4%)**
Average number of fractions per cervical cancer patient	**11.5**
Average number of fractions per treatment course = 11.5/0.58 =	**19.8**

Key to abbreviations in cervical cancer decision tree and tables

PS – Performance status

GMCT – Greater Metropolitan Clinical Taskforce

NCCN – National Comprehensive Cancer Network

NCI – National Cancer Institute

BCCA – British Columbia Cancer Agency

GOG – Gynecologic Oncology Group

RCR – Royal College of Radiologists

Table 2. Cervical Cancer. The incidence of attributes used to define number of radiotherapy fractions

Key	Population or subpopulation of interest	Attribute	Proportion of populations with this attribute	Quality of Information	References	Notes
A	All registry cancers	Cervical cancer	0.007	α	AIHW (16)	1
B	Cervix cancer, stage IB/IIA, good PS, non “bulky” disease, lymph node negative, negative margins, not “high risk” (GOG score<120), local recurrence	Isolated local recurrence	0.83	λ	Ijaz et al (292)	6
C	Cervix cancer, stage IB/IIA, good PS, non “bulky” disease, lymph node negative, negative margins, not “high risk” (GOG score<120), local recurrence, isolated local recurrence	Poor PS	0.12 0.14	λ λ	Ijaz et al (292) Jain et al (296)	6
D	Cervix cancer, stage IIB-IVA	Good PS	0.95	ζ	Roila et al (297)	3
E	Cervix cancer, stage IVB	Brain metastases	0.09	ζ	Saphner et al (298)	9

Cervical Cancer

The optimal radiotherapy fractionation model for cervical cancer was based on the optimal radiotherapy utilisation model for gynaecological cancer (1, 299).

Treatment Guidelines

The following clinical practice guidelines for the management of cervical cancer were identified:

- NSW Department of Health Greater Metropolitan Clinical Taskforce (GMCT) best clinical practice gynaecological cancer guidelines 2009 (2009) (286)
- RCR dose-fractionation guidelines (2006) (18)
- SIGN guidelines on management of cervical cancer (2008) (300)
- NCCN clinical practice guidelines on cervical cancer (version 1.2011) (287)
- NCI PDQ guidelines on cervical cancer (2010) (288)
- BC Cancer Agency gynecology cancer management guidelines (uterine cervix) (2008) (289)
- Cancer Care Ontario guidelines on primary treatment for locally advanced cervical cancer: concurrent platinum-based chemotherapy and radiation (2004) (301)
- International Federation of Gynecology and Obstetrics (FIGO) Committee on Gynecologic Oncology: FIGO staging classifications and clinical practice guidelines in the management of gynaecologic cancers (2000) (302)

Explanatory Notes for Tables 1 and 2

1. Incidence of cervical cancer

Cervical cancer constituted 0.7% of all cancers occurring in Australia in 2005 (16).

2. Adjuvant radiotherapy for stage IB/IIA cervical cancer: radiotherapy dose

The GMCT guidelines (286) recommend a dose of 45 to 54 Gy in 1.8 to 2 Gy per fraction (23 to 30 fractions). The NCCN guidelines (287) recommend a dose of 45 to 50 Gy in 1.8 to 2 Gy per fraction (23 to 28 fractions). The NCI guidelines (288) recommend a dose in the range of 50 Gy given over 5 weeks (50 Gy in 25 fractions). The BC Cancer Agency guidelines (289) have not recommended a particular dose fractionation schedule but state that patients post-hysterectomy with high risk features receive 5 to 6 weeks of external beam pelvic radiotherapy (25 to 30 fractions).

The guidelines justify their choice of fractionation using data from the Gynecologic Oncology Group (GOG)-92 multi-centre prospective randomised study in which 277 women with stage IB cervical cancer treated with radical hysterectomy and pelvic lymphadenectomy were randomised to receive adjuvant radiotherapy or no further treatment (303-304). The radiotherapy dose ranged from 46 Gy in 23 fractions to 50.4 Gy in 28 fractions. There was a 46% reduction in risk of recurrence (p=0.007) in the radiotherapy arm, and a statistically significant reduction in risk of progression or death (p=0.009). The guidelines also make reference to the study reported by Peters et al (305) in which 243 patients with high-risk stage IA_2, IB and IIA cervical cancer treated with radical hysterectomy and pelvic lymphadenectomy were randomised to receive adjuvant radiotherapy or adjuvant chemoradiotherapy. The pelvic radiotherapy dose was 49.3 Gy in 29 fractions, 1.7 Gy per fraction. Patients with positive high common iliac lymph nodes also received treatment to the para-aortic region to a dose of 45 Gy in 30 fractions, 1.5 Gy per fraction. Progression-free and overall survival was significantly improved in the patients receiving chemotherapy.

Based on the recommendations in the clinical guidelines, a radiotherapy course of 23 to 30 fractions is recommended for patients undergoing adjuvant radiotherapy for stage IB/IIA cervical cancer. In the model, the shortest dose fractionation schedule in the range, 46 Gy in 23 fractions, was used. A

sensitivity analysis was performed to assess the impact of the range of number of fractions (23 to 30 fractions) on the average number of fractions per cervical cancer patient.

3. Stage IIB-IVA cervical cancer: performance status

In the optimal radiotherapy utilisation model, Delaney et al (1, 299) referred to the data reported by Roila et al (297) to determine the proportion of patients with stage IB/IIA cervical cancer by performance status, as no specific reports on the proportions of cervical cancer patients by performance status were available. Despite an extensive literature search, no specific reports on the proportions of patients with stage IIB-IVA cervical cancer by performance status were identified. For the purposes of this model, the same data from Roila et al (297) were used to divide patients with stage IIB-IVA cervical cancer into those with good performance status (ECOG 0-3) and those with poor performance status (ECOG 4). Roila et al (297) reported on the performance status of 209 consecutive cancer patients treated at an Italian oncology centre. The vast majority of patients had breast, haematological, lung, genitourinary or gastrointestinal malignancy. Eleven patients (5%) were classified as having ECOG performance status of 4. In this model, patients with good performance status (ECOG 0-3) were recommended to have radical radiotherapy. Those with poor performance status (ECOG 4) were recommended to have palliative radiotherapy.

4. Radical radiotherapy for locally advanced cervical cancer: radiotherapy dose

The GMCT guidelines (286) recommend a dose of 45 to 54 Gy in 1.8 to 2 Gy per fraction (23 to 30 fractions). The NCCN guidelines (287) recommend a dose of 45 to 50 Gy in 1.8 to 2 Gy per fraction (23 to 28 fractions). The RCR guidelines (18) recommend a dose of 40 to 50.4 Gy in 1.8 to 2 Gy per fraction over 4 to 5.5 weeks (20 to 28 fractions). The guidelines state that these recommendations are based on evidence from clinical trials which have shown that concomitant cisplatin chemotherapy improves survival particularly in stage

II disease (306-310), and that the most common fractionation schedule used in these trials is 45 Gy in 25 fractions over 5 weeks.

In this model, the dose fractionation schedule, 45 Gy in 25 fractions, was used in patients recommended to have radical radiotherapy for locally advanced cervical cancer. A sensitivity analysis was performed to assess the impact of the range of number of fractions (20 to 30 fractions) on the average number of fractions per cervical cancer patient.

5. Palliative local radiotherapy for patients with (i) stage IB-IVA cervical cancer and poor performance status (ECOG 4) or (ii) stage IVB cervical cancer: radiotherapy dose

No specific dose fractionation schedules are recommended in the guidelines. Lonkhuijzen and Thomas (311) performed a systematic review on palliative radiotherapy for cervical cancer. Eight papers were identified and none compared the results of different fractionation schedules. Most studies reported the use of 1 to 3 fractions of 10 Gy. As an example, Onsrud et al (295) retrospectively reviewed 64 patients with cervical or endometrial cancer treated with palliative radiotherapy at the University Hospital, Norway, between 1988 and 1998. Of these, 37 patients had cervical cancer. All patients had a life expectancy of less than 1 year. They were considered unsuitable for surgery or radical radiotherapy due to stage of disease, old age or co-morbidities. Of these patients, 28 (group I) had primary advanced or recurrent pelvic disease and were treated with the intention of symptom palliation only. The other 9 patients (group II) had potentially curable stage I-II disease but were considered unsuitable for radical treatment due to old age, dementia or other severe medical problems. The treatment intention for this group of patients was life prolongation and symptom prevention.

For group I, 23 patients (82%) received 20 Gy in 2 fractions, 4 patients (14%) received 10 Gy in 1 fraction and 1 patient (4%) received 30 Gy in 3 fractions. The success rate for control of bleeding was 79% and that for vaginal discharge was 36%. No significant pain reduction was noted. Median survival was 10

months. For group II, all patients were treated with 20 Gy in 2 fractions. The success rate for control of bleeding was 89% and that for vaginal discharge was 50%. Median survival was 13 months. Of the whole group of 64 patients, 3 patients (5%) had serious late bowel complications 9 to 10 months after treatment. The authors concluded that the 10 Gy single fraction pelvic radiation regimen is an effective means of symptom palliation. However, the risk of late bowel complications is a concern for patients with a life expectancy greater than 9 months. In this study, the most commonly used dose fractionation schedule was 20 Gy in 2 fractions.

In this model, the dose fractionation schedule, 20 Gy in 2 fractions, was used for patients recommended to have palliative pelvic radiotherapy based on the published data. A sensitivity analysis was performed to assess the impact of the range of number of fractions (1 to 3 fractions) on the average number of fractions per cervical cancer patient.

6. Radiotherapy for local recurrence after surgery for stage IB/IIA cervical cancer: proportion of patients having radical versus palliative radiotherapy

Ijaz et al (292) retrospectively reviewed the records of all patients referred to the Department of Radiation Oncology at MDACC for treatment of recurrent cervical carcinoma after radical hysterectomy between 1964 and 1994. Of the 60 patients previously treated with surgery alone, 50 patients (83%) had isolated pelvic disease recurrence and 10 patients (17%) had concomitant distant disease. In the model, these data were used to divide patients with local recurrence after initial surgery for stage IB/IIA cervical cancer into two branches: those with isolated local recurrence (0.83) and those with local and distant recurrence (0.17). In the model, patients with concomitant local and distant recurrence were recommended to be treated with palliative radiotherapy.

Ijaz et al (292) also reported that of the 50 patients with isolated local recurrence, 43 patients (86%) were treated with curative intent, and the remaining 7 patients (14%) who had advanced disease and poor performance

status were treated with palliative intent using hypofractionated radiotherapy. In the model, these data were used to further divide patients with isolated local recurrence into two branches: those with good performance status and treated with radical radiotherapy (0.86) and those with poor performance status and treated with palliative radiotherapy (0.14). Jain et al (296) also reported that of the 147 patients with locally recurrent cervical cancer referred to the Christie Hospital, UK, between 1985 and 1997 for consideration of radiotherapy, 17 patients (12%) received palliative radiotherapy. Details of these patients were not discussed, but it is assumed that these patients had advanced disease and poor performance status and were therefore treated with palliative intent.

7. Radical radiotherapy for local recurrence after surgery for stage IB/IIA cervical cancer: radiotherapy dose

No specific dose fractionation schedules for radical radiotherapy for local recurrence of cervical cancer are recommended in the guidelines.

The NCI guidelines (288) state that for recurrence in the pelvis following radical surgery, radiation therapy in combination with chemotherapy may cure 40% to 50% of patients, making reference to the study reported by Thomas et al (290) which showed that 8 of 17 patients (47%) treated with this approach were alive and disease-free at 21 to 58 months after treatment. The same group later reported long-term follow-up results of these 17 patients together with the results of an additional 23 patients (291). All 40 patients with recurrent cervical cancer after initial surgery were treated with concurrent chemoradiotherapy between 1981 and 1991. At a median follow-up of 57 months, 18 patients (45%) remained alive without disease. The most commonly used dose fractionation schedule was 52.8 Gy in 33 fractions, followed by either a brachytherapy boost or an external beam radiotherapy boost.

In the study reported by Ijaz et al (292), 43 patients with isolated local recurrence of cervical cancer after initial surgery were treated with radical radiotherapy with or without chemotherapy. Most patients were treated with a dose of 45 to 65 Gy in 1.8 to 2 Gy per fraction (25 to 36 fractions). The 5-year

overall survival rate was 39%. Larson et al (293) reported on 15 patients with locally recurrent cervical cancer treated with radical radiotherapy. Patients received a dose of 45 to 70 Gy in 1.8 to 2 Gy per fraction (25 to 39 fractions). Maneo et al (294) treated 35 patients with recurrent cervical cancer after initial surgery. Patients were treated with concurrent chemoradiotherapy, and received a radiotherapy dose of 50.4 to 70 Gy in 1.8 Gy per fraction (28 to 39 fractions). The actuarial 3-year survival was 25%.

In the model, the dose fractionation schedule, 52.8 Gy in 33 fractions, was used, as this was the most commonly used dose fractionation schedule in the study reported by Thomas et al (290-291) with the highest disease-free survival. A sensitivity analysis was performed to assess the impact of the range of number of fractions (25 to 39 fractions) on the average number of fractions per cervical cancer patient.

8. Palliative radiotherapy for local recurrence after surgery for stage IB/IIA cervical cancer: radiotherapy dose

No specific dose fractionation schedules for palliative radiotherapy for local recurrence of cervical cancer are recommended in the guidelines. In the study reported by Ijaz et al (292), 7 patients were treated with palliative radiotherapy. Six patients received 10 Gy in 1 fraction or 20 Gy in 2 fractions, 1 patient received 30 Gy in 10 fractions. In the study reported by Larson et al (293), 1 patient received 30 Gy in 3 fractions and 1 patient received 30 Gy in 10 fractions.

In the model, the same palliative dose fractionation schedule used for patients with stage IB-IVA cervical cancer and poor performance status, 20 Gy in 2 fractions, was used for patients recommended to have palliative radiotherapy for local recurrence of cervical cancer. A sensitivity analysis was performed to assess the impact of the range of number of fractions (1 to 3 fractions) on the average number of fractions per cervical cancer patient (see note 5).

9. Stage IVB cervical cancer: proportion of patients with brain metastases

Saphner et al (298) reported that 6 patients had brain metastases out of 67 patients (9%) with stage IV disease in a study of 1219 patients with cervical cancer. This percentage was used to divide patients with stage IVB cervical cancer into two branches in the model: those with brain metastases (0.09) and those with no brain metastases (0.91).

10. Palliative radiotherapy for brain metastases: radiotherapy dose

The dose fractionation schedule, 20 Gy in 5 fractions, was used in this model. A sensitivity analysis was performed to assess the impact of the range of number of fractions (5 to 10 fractions) on the average number of fractions per cervical cancer patient (see chapter 18).

11. Palliative radiotherapy for bone metastases: radiotherapy dose

A single fraction of 8 Gy was used in this model. A sensitivity analysis was performed to assess the impact of the range of number of fractions (1 to 5 fractions) on the average number of fractions per cervical cancer patient (see chapter 18).

Sensitivity Analysis

The optimal number of fractions per cervical cancer patient was 11.5.

There was a range of number of fractions considered appropriate for adjuvant radiotherapy for stage IB/IIA cervical cancer (23 to 30 fractions), radical radiotherapy for locally advanced cervical cancer (20 to 30 fractions), palliative local radiotherapy in patients with non-metastatic cervical cancer and poor performance status or with metastatic cervical cancer (1 to 3 fractions), radical radiotherapy for local recurrence after initial surgery for stage IB/IIA cervical cancer (25 to 39 fractions), palliative radiotherapy for local recurrence after initial surgery for stage IB/IIA cervical cancer (1 to 3 fractions), palliative

radiotherapy for brain metastases (5 to 10 fractions) and for bone metastases (1 to 5 fractions).

To assess the impact of these uncertainties on the average number of radiotherapy fractions in cervical cancer patients, a one-way sensitivity analysis was performed for each of these variables. The impact of these variables on the average number of radiotherapy fractions is illustrated by a tornado diagram (Fig. 1). The average number of radiotherapy fractions per cervical cancer patient varied between 9.8 and 13.3. This range was primarily due to the range of number of fractions considered appropriate for radical radiotherapy for locally advanced cervical cancer (20 to 30 fractions). The optimal fractionation tree for cervical cancer is shown in Figs. 2-4.

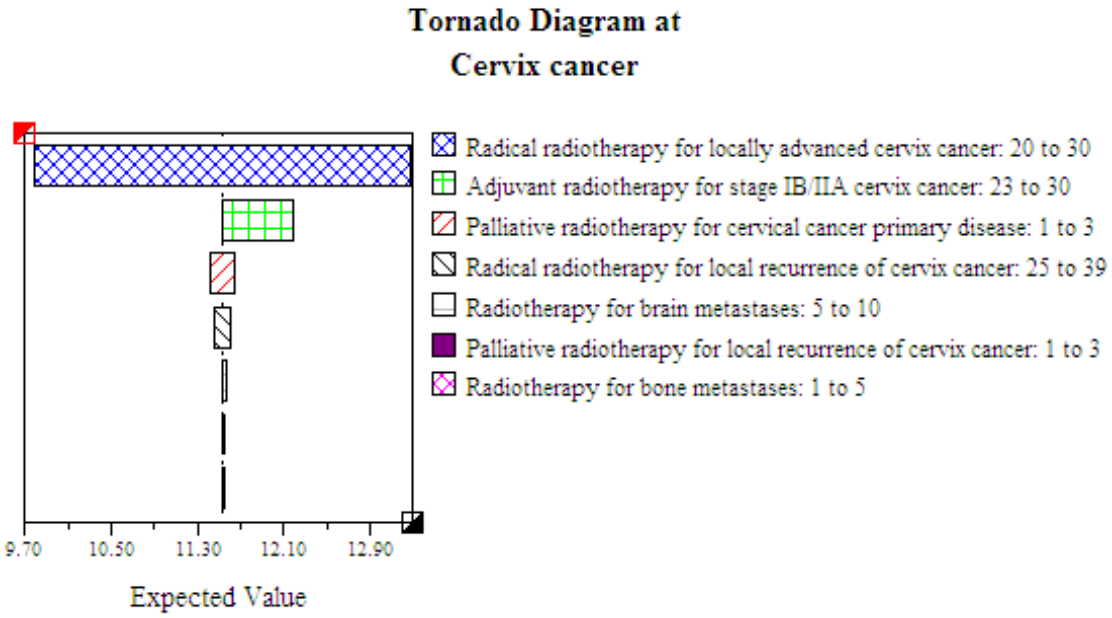

Figure 1. Cervical cancer. Sensitivity analysis

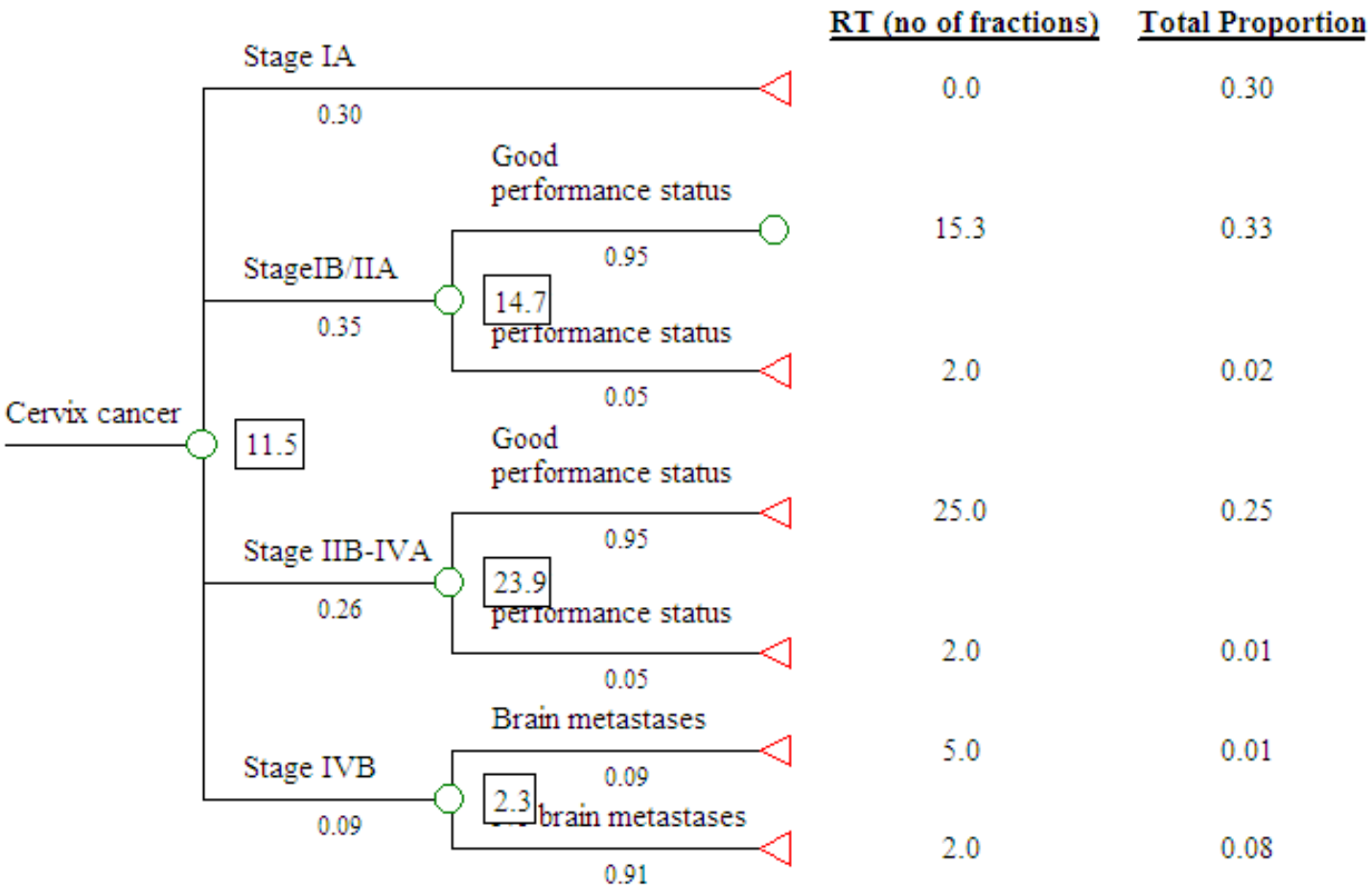

Figure 2. Cervical cancer. Optimal fractionation tree

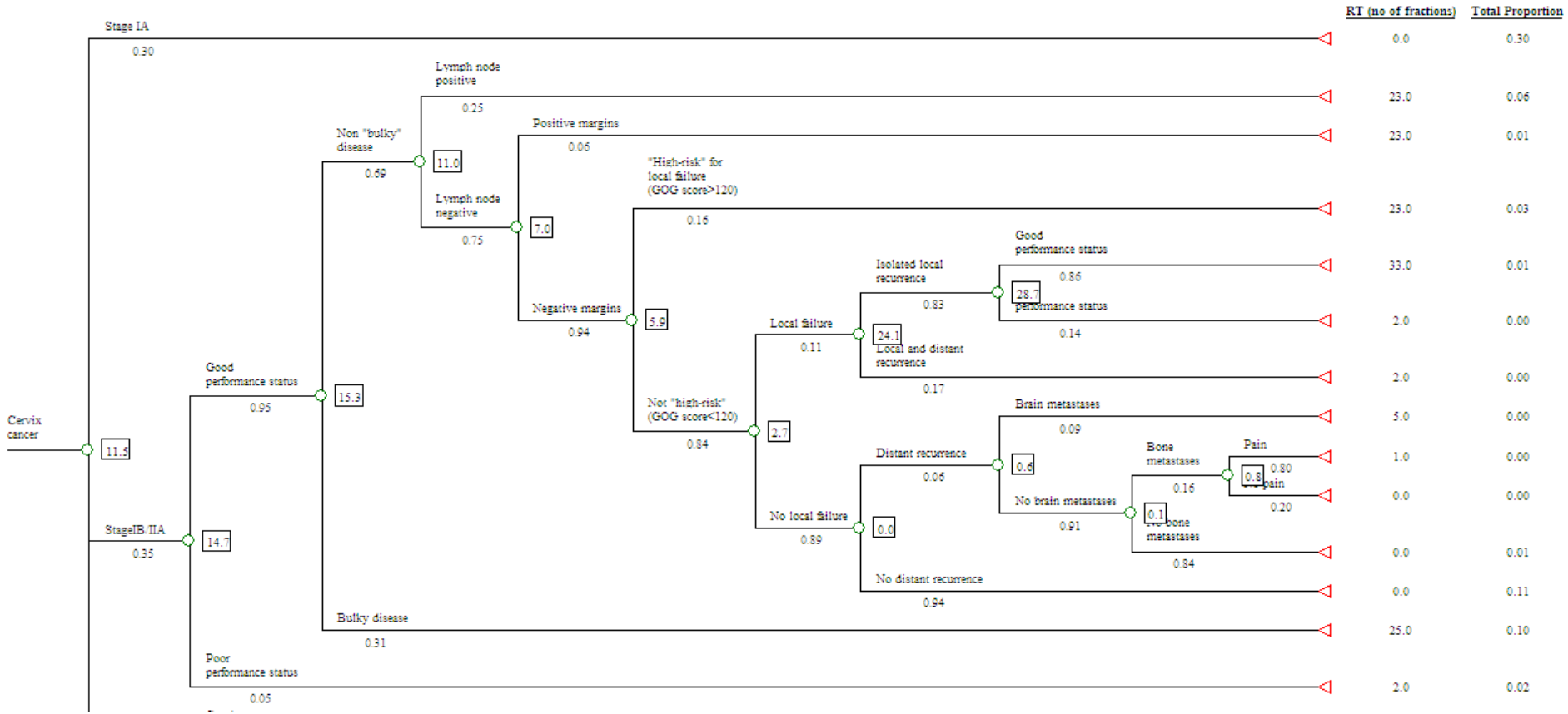

Figure 3. Stage IB/IIA cervical cancer. Optimal fractionation tree

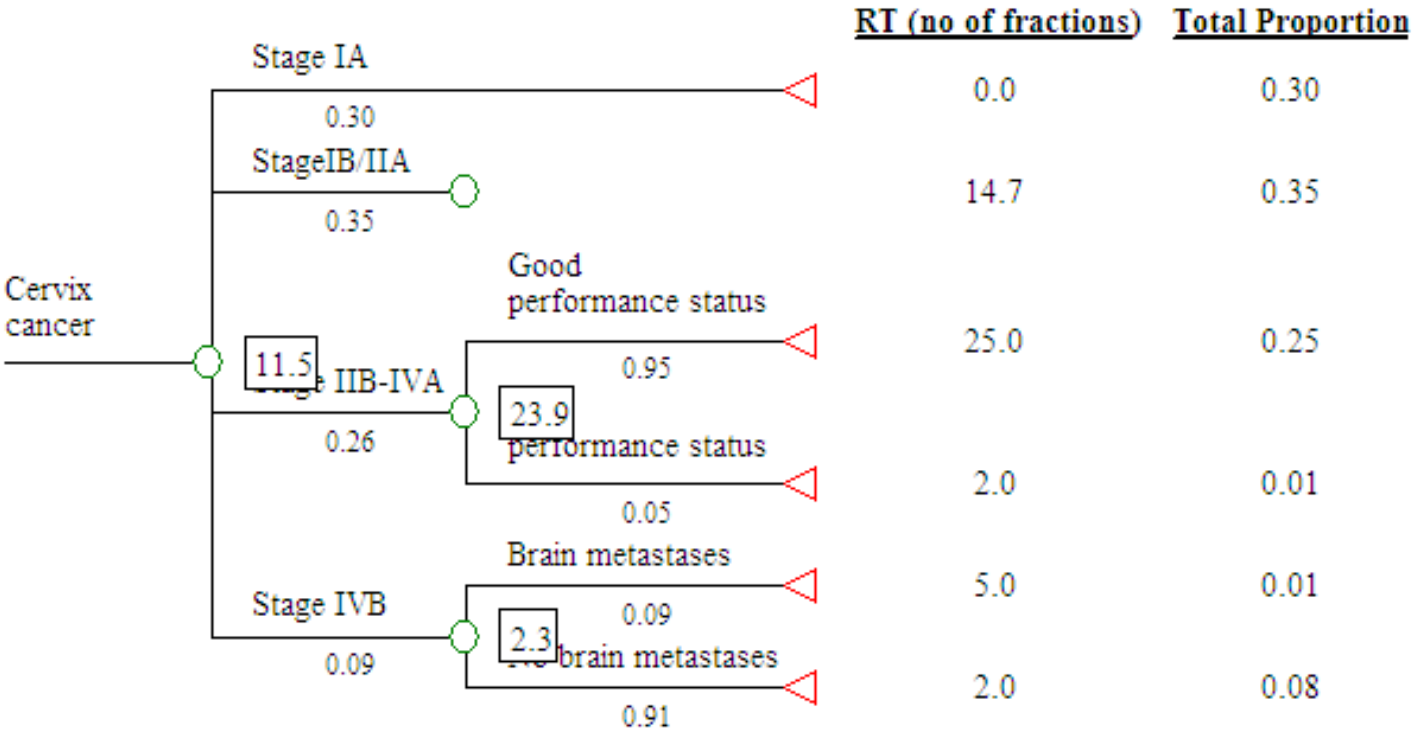

Figure 4. Stage IIB-IV cervical cancer. Optimal fractionation tree

9.2 Endometrial Cancer

Table 1. Endometrial Cancer. Number of fractions of radiotherapy - Sources of evidence

Outcome no (utilisation model)	Clinical scenario (utilisation mod	Outcome no (fractionation model)	Clinical scenario (addition to fractionation model)	No of fractions	Range of no of fractions	Level of evidence	References	Notes	Proportion of all endometrial cancer patients
1	Endometrioid, Stage I, good PS, lymph node dissection, node negative, local recurrence	1	−	23	23−28	III	NCCN guidelines (312)	3	0.01
2	Endometrioid, Stage I, good PS, lymph node dissection, node negative, no local recurrence, distant recurrence, brain metastases	2	−	5	5−10	II	RCR guidelines (18)	10	<0.01
3	Endometrioid, Stage I, good PS, lymph node dissection,	3	−	1	1−5	I	RCR guidelines (18)	11	<0.01

Outcome no (utilisation model)	Clinical scenario (utilisation mod	Outcome no (fractionation model)	Clinical scenario (addition to fractionation model)	No of fractions	Range of no of fractions	Level of evidence	References	Notes	Proportion of all endometrial cancer patients
	node negative, no local recurrence, distant recurrence, no brain metastases, painful bone metastases								
4	Endometrioid, Stage I, good PS, lymph node dissection, node negative, no local recurrence, distant recurrence, no brain metastases, no painful bone metastases, painful other metastases	4	−	5	−	−	−	12	<0.01
7	Endometrioid, Stage	7	−	23	23−28	II	NCCN guidelines (312)	2	0.14

Outcome no (utilisation model)	Clinical scenario (utilisation mod	Outcome no (fractionation model)	Clinical scenario (addition to fractionation model)	No of fractions	Range of no of fractions	Level of evidence	References	Notes	Proportion of all endometrial cancer patients
	I, good PS, no lymph node dissection, adverse pathology						RCR guidelines (18)		
8	Endometrioid, Stage I, good PS, no lymph node dissection, no adverse pathology, local recurrence	8	−	23	23−28	III	NCCN guidelines (312)	3	0.01
9	Endometrioid, Stage I, good PS, no lymph node dissection, no adverse pathology, no local recurrence, distant recurrence, brain metastases	9	−	5	5−10	II	RCR guidelines (18)	10	<0.01
10	Endometrioid, Stage I, good PS, no lymph	10	−	1	1−5	I	RCR guidelines (18)	11	<0.01

Outcome no (utilisation model)	Clinical scenario (utilisation mod	Outcome no (fractionation model)	Clinical scenario (addition to fractionation model)	No of fractions	Range of no of fractions	Level of evidence	References	Notes	Proportion of all endometrial cancer patients
	node dissection, no adverse pathology, no local recurrence, distant recurrence, no brain metastases, painful bone metastases								
11	Endometrioid, Stage I, good PS, no lymph node dissection, no adverse pathology, no local recurrence, distant recurrence, no brain metastases, no painful bone metastases, painful other metastases	11	–	5	–	–	–	12	<0.01

Outcome no (utilisation model)	Clinical scenario (utilisation mod	Outcome no (fractionation model)	Clinical scenario (addition to fractionation model)	No of fractions	Range of no of fractions	Level of evidence	References	Notes	Proportion of all endometrial cancer patients
14	Endometrioid, Stage I, poor PS	14	−	2	1−3	IV	Onsrud et al (295)	8	0.03
15	Endometrioid, Stage IIA, good PS, lymph node dissection, node negative, local recurrence	15	−	23	23−28	III	NCCN guidelines (312)	3	<0.01
16	Endometrioid, Stage IIA, good PS, lymph node dissection, node negative, no local recurrence, distant recurrence, brain metastases	16	−	5	5−10	II	RCR guidelines (18)	10	<0.01
17	Endometrioid, Stage IIA, good PS, lymph node dissection,	17	−	1	1−5	I	RCR guidelines (18)	11	<0.01

Outcome no (utilisation model)	Clinical scenario (utilisation mod	Outcome no (fractionation model)	Clinical scenario (addition to fractionation model)	No of fractions	Range of no of fractions	Level of evidence	References	Notes	Proportion of all endometrial cancer patients
	node negative, no local recurrence, distant recurrence, no brain metastases, painful bone metastases								
18	Endometrioid, Stage IIA, good PS, lymph node dissection, node negative, no local recurrence, distant recurrence, no brain metastases, no painful bone metastases, painful other metastases	18	–	5	–	–	–	12	<0.01
21	Endometrioid, Stage	21	–	23	23–28	II	NCCN guidelines (312)	2	0.02

Outcome no (utilisation model)	Clinical scenario (utilisation mod	Outcome no (fractionation model)	Clinical scenario (addition to fractionation model)	No of fractions	Range of no of fractions	Level of evidence	References	Notes	Proportion of all endometrial cancer patients
	IIA, good PS, no lymph node dissection, adverse pathology						RCR guidelines (18)		
22	Endometrioid, Stage IIA, good PS, no lymph node dissection, no adverse pathology, local recurrence	22	−	23	23−28	III	NCCN guidelines (312)	3	<0.01
23	Stage IIA, good PS, no lymph node dissection, no adverse pathology, no local recurrence, distant recurrence, brain metastases	23	−	5	5−10	II	RCR guidelines (18)	10	<0.01

Outcome no (utilisation model)	Clinical scenario (utilisation mod	Outcome no (fractionation model)	Clinical scenario (addition to fractionation model)	No of fractions	Range of no of fractions	Level of evidence	References	Notes	Proportion of all endometrial cancer patients
24	Endometrioid, Stage IIA, good PS, no lymph node dissection, no adverse pathology, no local recurrence, distant recurrence, no brain metastases painful bone metastases	24	−	1	1−5	I	RCR guidelines (18)	11	<0.01
25	Endometrioid, Stage IIA, good PS, no lymph node dissection, no adverse pathology, no local recurrence, distant recurrence,	25	−	5	−	−	−	12	<0.01

Outcome no (utilisation model)	Clinical scenario (utilisation mod	Outcome no (fractionation model)	Clinical scenario (addition to fractionation model)	No of fractions	Range of no of fractions	Level of evidence	References	Notes	Proportion of all endometrial cancer patients
	no brain mets, no painful bone metastases, painful other metastases								
28	Endometrioid, Stage IIA, poor PS	28	−	2	1−3	IV	Onsrud et al (295)	8	<0.01
29	Endometrioid, Stage IIB-III	29	Good PS	23	23−28	II	NCCN guidelines (312) RCR guidelines (18)	5	0.09
		30	Poor PS	2	1−3	IV	Onsrud et al (295)	8	<0.01
30	Endometrioid, Stage IV, brain metastases	31	−	5	5−10	II	RCR guidelines (18)	10	<0.01
31	Endometrioid, Stage IV, no brain metastases, painful bone metastases	32	−	1	1−5	I	RCR guidelines (18)	11	<0.01
32	Endometrioid, Stage IV, no brain	33	−	5	−	−	−	12	<0.01

Outcome no (utilisation model)	Clinical scenario (utilisation mod	Outcome no (fractionation model)	Clinical scenario (addition to fractionation model)	No of fractions	Range of no of fractions	Level of evidence	References	Notes	Proportion of all endometrial cancer patients
	metastases, no painful bone metastases, painful other metastases								
34	Papillary serous and clear cell carcinoma	35	Stage I-III, good PS	23	23−28	IV	NCCN guidelines (312)	7	0.08
		36	Stage I-III, poor PS	2	1−3	IV	Onsrud et al (295)	8	<0.01
		37	Stage IV, brain metastases	5	5−10	II	RCR guidelines (18)	10	<0.01
		38	Stage IV, no brain metastases, painful bone metastases	1	1−5	I	RCR guidelines (18)	11	<0.01
		39	Stage IV, no brain metastases, no painful bone	5	−	−	−	12	<0.01

Outcome no (utilisation model)	Clinical scenario (utilisation mod	Outcome no (fractionation model)	Clinical scenario (addition to fractionation model)	No of fractions	Range of no of fractions	Level of evidence	References	Notes	Proportion of all endometrial cancer patients
			metastases, painful other site metastases						

Proportion of all endometrial cancer patients in whom radiotherapy is recommended	**0.42 (42%)**
Proportion of all cancer patients = 0.42 x 0.02 =	**0.008 (0.8%)**
Average number of fractions per endometrial cancer patient	**8.5**
Average number of fractions per treatment course = 8.5/0.42 =	**20.2**

Key to abbreviations in endometrial cancer decision tree and tables

PS – Performance status

NCCN – National Comprehensive Cancer Network

RCR – Royal College of Radiologists

Table 2. Endometrial Cancer. The incidence of attributes used to define number of radiotherapy fractions

Key	Population or subpopulation of interest	Attribute	Proportion of populations with this attribute	Quality of Information	References	Notes
A	All registry cancers	Endometrial cancer	0.018	α	AIHW (16)	1
B	Endometrial cancer, stage IIB/III	Good PS	0.95	ζ	Roila et al (297)	4
C	Endometrial cancer, papillary serous and clear cell carcinoma	Stage I-III	0.68	γ	SEER (172)	6
D	Endometrial cancer, papillary serous and clear cell carcinoma, stage I-III	Good PS	0.95	ζ	Roila et al (297)	6
E	Endometrial cancer, papillary serous and clear cell carcinoma, stage IV	Brain metastases	0.03	δ	Salvesen et al (313)	9
F	Endometrial cancer, papillary serous and clear cell carcinoma, stage IV	Painful bone metastases	0.06	δ	Salvesen et al (313)	9
G	Endometrial cancer, papillary serous and clear cell carcinoma, stage IV	Painful other site metastases	0.06	δ	Salvesen et al (313)	9

Endometrial Cancer

The optimal radiotherapy fractionation model for endometrial cancer was based on the optimal radiotherapy utilisation model for gynaecological cancer (1, 314).

Treatment Guidelines

The following clinical practice guidelines for the management of endometrial cancer were identified:

- NSW Department of Health GMCT best clinical practice gynaecological cancer guidelines 2009 (2009) (286)
- RCR dose-fractionation guidelines (2006) (18)
- NCCN clinical practice guidelines on uterine neoplasms (version 1.2011) (312)
- NCI PDQ guidelines on endometrial cancer (2010) (315)
- BC Cancer Agency gynaecology cancer management guidelines (endometrium) (2010) (316)
- Cancer Care Ontario guidelines on adjuvant radiotherapy in women with stage I endometrial cancer (2006) (317)
- FIGO Committee on Gynecologic Oncology: FIGO staging classifications and clinical practice guidelines in the management of gynaecologic cancers (2000) (302)

Explanatory Notes for Tables 1 and 2

1. Incidence of endometrial cancer

Endometrial cancer constituted 1.8% of all cancers occurring in Australia in 2005 (16).

2. Adjuvant radiotherapy for stage I/IIA endometrioid carcinoma: radiotherapy dose

The NCCN guidelines on uterine neoplasms (312) recommend a dose of 45 to 50 Gy. Given in 1.8 to 2 Gy per fraction, this dose is delivered in 23 to 28 fractions. The RCR guidelines (18) recommend a dose of 45 to 46 Gy in 1.8 to 2 Gy per fraction over 4.5 to 5 weeks (23 to 25 fractions).

The NCCN guidelines (312) and RCR guidelines (18) justify their recommendations by referring to the Postoperative Radiation Therapy for Endometrial Carcinoma (PORTEC) study in which patients with endometrial cancer were randomised to adjuvant radiotherapy, 46 Gy in 23 fractions, or no further treatment, post-operatively (318-320). The NCCN guidelines (312) also make reference to the GOG-99 study in which patients were randomised to adjuvant radiotherapy, 50.4 Gy in 28 fractions, or no further treatment, post-operatively (321). Both studies showed that adjuvant radiotherapy resulted in improved locoregional control with no significant improvement in survival.

The dose fractionation schedule, 46 Gy in 23 fractions, was used in this model for patients with stage I-IIA endometrioid carcinoma recommended to have adjuvant pelvic radiotherapy. A sensitivity analysis was performed to assess the impact of the range of number of fractions (23 to 28 fractions) on the average number of fractions per endometrial cancer patient.

3. Radiotherapy for local recurrence of stage I/IIA endometrioid carcinoma: radiotherapy dose

The NCCN guidelines (312) recommend a dose of 45 to 50 Gy. Given in 1.8 to 2 Gy per fraction, this dose is delivered in 23 to 28 fractions. The GMCT guidelines (286) recommend whole pelvic radiotherapy and vaginal vault brachytherapy in patients with vaginal vault/central pelvic recurrence, making reference to the study reported by Jhingran et al (322), a retrospective review of 91 patients with vaginal recurrence after surgery treated at the MDACC. Patients were treated with brachytherapy, external beam radiotherapy, or a combination of both. This study showed that patients treated with combined external beam radiotherapy and brachytherapy had significantly better local

control. The median external beam radiotherapy dose was 50 Gy. The median dose per fraction was not reported. Delivered in standard fractionation of 1.8 to 2 Gy per fraction, this dose is given in 25 to 28 fractions.

The dose fractionation schedule, 46 Gy in 23 fractions, was used in the model. A sensitivity analysis was performed to assess the impact of the range of number of fractions (23 to 28 fractions) on the average number of fractions per endometrial cancer patient.

4. Radiotherapy for stage IIB-III endometrioid carcinoma: intent of treatment according to performance status

In the optimal radiotherapy utilisation model (1, 314), all patients with stage IIB-III endometrioid carcinoma were recommended to have radiotherapy, either as radical or palliative treatment. For the purposes of this model, patients with good performance status were recommended to have radical or adjuvant radiotherapy, whereas patients with poor performance status were recommended to have palliative radiotherapy. In this model, this branch was divided into two branches: patients with good performance status (ECOG 0-3) and patients with poor performance status (ECOG 4).

Very little data exist on performance status by stage for endometrial cancer. In the optimal radiotherapy utilisation model, Delaney et al (1, 314) referred to the data reported by Roila et al (297) to determine the proportion of patients with stage I-IIA endometrioid cancer by performance status, as no specific reports on the proportions of endometrial cancer patients by performance status were available. In this model, the same data from Roila et al (297) were used to divide patients with stage IIB-III endometrioid carcinoma into those with good performance status (ECOG 0-3) and those with poor performance status (ECOG 4). Roila et al (297) reported on the performance status of 209 consecutive cancer patients treated at an Italian oncology centre. The vast majority of patients had breast, haematological, lung, genitourinary or gastrointestinal malignancy. Eleven patients (5%) were classified as having ECOG performance status of 4.

5. Radiotherapy for patients with stage IIB-III endometrioid carcinoma and good performance status (ECOG 0-3): radiotherapy dose

Patients with stage IIB-III endometrioid carcinoma and good performance status were recommended to have surgery and adjuvant radiotherapy or primary radiotherapy for inoperable disease due to pelvic wall extension.

The NCCN guidelines (312) recommend a dose of 45 to 50 Gy. Given in 1.8 to 2 Gy per fraction, this dose is delivered in 23 to 28 fractions. The RCR guidelines (18) recommend a dose of 45 to 46 Gy in 1.8 to 2 Gy per fraction over 4.5 to 5 weeks (23 to 25 fractions). The NCCN guidelines (312) make reference to the randomised controlled study reported by Susumu et al (323) in which 385 patients with stage IC-IIIC endometrial carcinoma with deeper than 50% myometrial invasion were randomised to adjuvant pelvic radiotherapy or adjuvant chemotherapy post-surgery. The radiotherapy dose was 45 to 50 Gy in 1.8 to 2 Gy per fraction. This study showed no significant differences in overall survival and progression-free survival between the two groups.

The dose fractionation schedule, 46 Gy in 23 fractions, was used in the model. A sensitivity analysis was performed to assess the impact of the range of number of fractions (23 to 28 fractions) on the average number of fractions per endometrial cancer patient.

6. Radiotherapy for papillary serous or clear cell carcinoma: intent of treatment according to stage and performance status

In the optimal radiotherapy utilisation model (1, 314), all patients with papillary serous or clear cell carcinoma were recommended to have radiotherapy, either as radical, adjuvant or palliative treatment. In this model, this branch was divided into two branches: patients with stage I-III disease and those with stage IV disease. The branch of patients with stage I-III disease was further divided into two branches: patients with good performance status (ECOG 0-3) and patients with poor performance status (ECOG 4). Patients with non-metastatic

disease and good performance status were recommended to have radical or adjuvant radiotherapy, whereas patients with non-metastatic disease and poor performance status or with metastatic disease were recommended to have palliative radiotherapy.

The SEER database (172) showed that between 1988 and 2001, of the 2155 patients with papillary serous or clear cell carcinoma with available stage data, 681 (32%) had stage IV disease. The data from Roila et al (297) were used to divide patients with stage I-III disease into those with good performance status (ECOG 0-3) and those with poor performance status (ECOG 4).

7. Radiotherapy for patients with stage I-III papillary serous or clear cell carcinoma and good performance status (ECOG 0-3): radiotherapy dose

The NCCN guidelines (312) recommend a dose of 45 to 50 Gy. Given in 1.8 to 2 Gy per fraction, this dose is delivered in 23 to 28 fractions. In the model, the dose fractionation schedule, 46 Gy in 23 fractions, was used. A sensitivity analysis was performed to assess the impact of the range of number of fractions (23 to 28 fractions) on the average number of fractions per endometrial cancer patient.

8. Palliative radiotherapy for patients with endometrial carcinoma and poor performance status (ECOG 4): radiotherapy dose

No specific dose fractionation schedules are recommended in the guidelines. Onsrud et al (295) retrospectively reviewed 64 patients with cervical or endometrial cancer treated with palliative radiotherapy at the University Hospital, Norway, between 1988 and 1998. Of these, 27 patients had endometrial cancer. All patients had a life expectancy of less than one year. They were considered unsuitable for surgery or radical radiotherapy due to stage of disease, old age or co-morbidities. Of these patients, 18 (group I) had primary advanced or recurrent pelvic disease and were treated with the intention of symptom palliation. The other 9 patients (group II) had potentially

curable stage I-II disease but were considered unsuitable for radical treatment due to old age, dementia or other severe medical problems. The treatment intention for this group of patients was life prolongation and symptom prevention.

For group I, 11 patients (61%) received 20 Gy in 2 fractions, 6 patients (33%) received 10 Gy in 1 fraction and 1 patient (6%) received 30 Gy in 3 fractions. The success rate for control of bleeding was 100% and that for vaginal discharge was 33%. No significant pain reduction was noted. Median survival was 7 months. For group II, 8 patients (89%) were treated with 20 Gy in 2 fractions and 1 patient (11%) was treated with 10 Gy in 1 fraction. Bleeding was controlled in all patients. Median survival was 15 months. Of the whole group of 64 patients, 3 patients (5%) had serious late bowel complications 9 to 10 months after treatment. The authors concluded that the 10 Gy single fraction pelvic radiation regimen is an effective means of symptom palliation. However, the risk of late bowel complications is a concern for patients with a life expectancy greater than 9 months. In this study, the most commonly used dose fractionation schedule was 20 Gy in 2 fractions.

In this model, the dose fractionation schedule, 20 Gy in 2 fractions, was used for patients recommended to have palliative pelvic radiotherapy based on these published data. A sensitivity analysis was performed to assess the impact of the range of number of fractions (1 to 3 fractions) on the average number of fractions per endometrial cancer patient.

9. **Stage IV papillary serous or clear cell carcinoma: metastatic pattern**

Salvesen et al (313) reported on 249 patients with endometrial carcinoma from Hordaland county, Norway. A total of 32 patients developed metastatic disease. Of these patients, 3% had symptomatic brain metastases, 6% had painful bone metastases, and 6% had painful metastases in other sites.

10. Palliative radiotherapy for brain metastases: radiotherapy dose

The dose fractionation schedule, 20 Gy in 5 fractions, was used in this model. A sensitivity analysis was performed to assess the impact of the range of number of fractions (5 to 10 fractions) on the average number of fractions per endometrial cancer patient (see chapter 18).

11. Palliative radiotherapy for bone metastases: radiotherapy dose

A single fraction of 8 Gy was used in this model. A sensitivity analysis was performed to assess the impact of the range of number of fractions (1 to 5 fractions) on the average number of fractions per endometrial cancer patient (see chapter 18).

12. Palliative radiotherapy for painful metastases (other than brain and bone metastases): radiotherapy dose

In the study reported by Salvesen et al (313), of the patients who developed distant metastases, 6% had metastases in the abdominal wall or lymph nodes with pain being the main symptom.

No specific dose fractionation schedules are recommended in the guidelines for palliative radiotherapy for metastases to the abdominal wall and lymph nodes. A commonly used dose fractionation schedule, 20 Gy in 5 fractions, was used in the model.

Sensitivity Analysis

The optimal number of fractions per endometrial cancer patient was 8.5.

As discussed by Delaney et al (1, 314), no data could be identified to estimate the proportion of early stage endometrioid cancer patients who undergo a lymph node dissection. In the optimal radiotherapy utilisation model, an arbitrary value of 0.5 was chosen based on discussion with gynaecological oncology experts, and the sensitivity analysis varied this proportion between 0.1 and 0.9 to assess

the impact that this uncertainty had on the overall rate of radiotherapy utilisation.

There was also a range of number of fractions considered appropriate for adjuvant radiotherapy for stage I-IIA endometrioid carcinoma (23 to 28 fractions), radiotherapy for local recurrence of stage I-IIA endometrioid carcinoma (23 to 28 fractions), radiotherapy for patients with stage IIB-III endometrioid carcinoma and good performance status (23 to 28 fractions), radiotherapy for patients with papillary serous or clear cell carcinoma and good performance status (23 to 28 fractions), palliative pelvic radiotherapy for patients with poor performance status (1 to 3 fractions), palliative radiotherapy for brain metastases (5 to 10 fractions) and palliative radiotherapy for bone metastases (1 to 5 fractions).

To assess the impact of these uncertainties on the average number of radiotherapy fractions in endometrial cancer patients, a one-way sensitivity analysis was performed for each of these variables. The impact of these variables on the average number of radiotherapy fractions is illustrated by a tornado diagram (Fig. 1). The average number of radiotherapy fractions per endometrial cancer patient varied between 5.7 and 11.2, as a result of the uncertainty of the proportion of early stage endometrioid cancer patients who undergo a lymph node dissection. As a result of the uncertainties of number of fractions, the average number of radiotherapy fractions per endometrial cancer patient only varied between 8.4 and 9.2. The optimal fractionation tree for endometrial cancer is shown in Figs. 2-6.

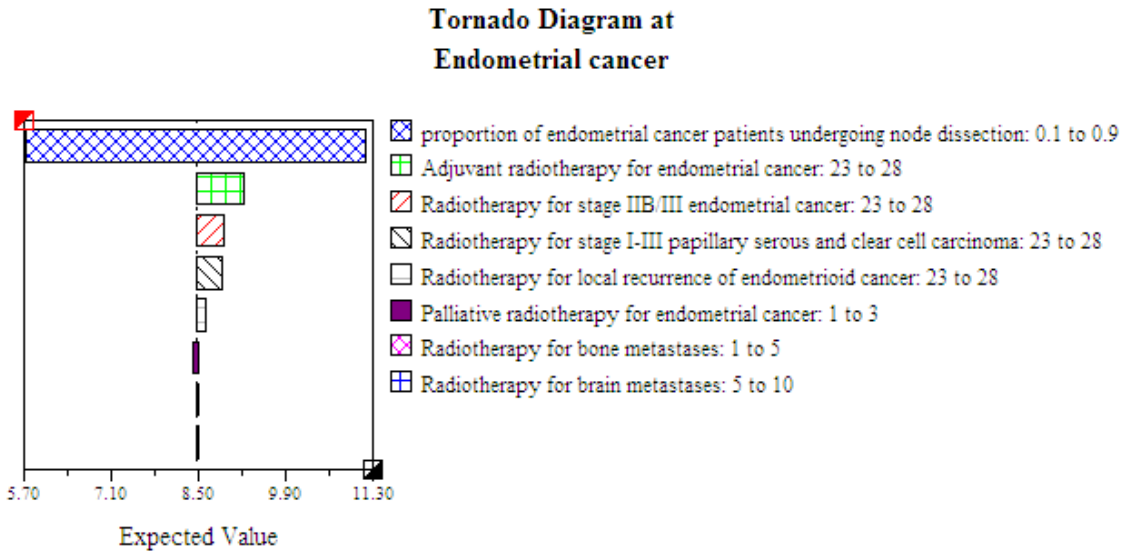

Figure 1. Endometrial cancer. Sensitivity analysis

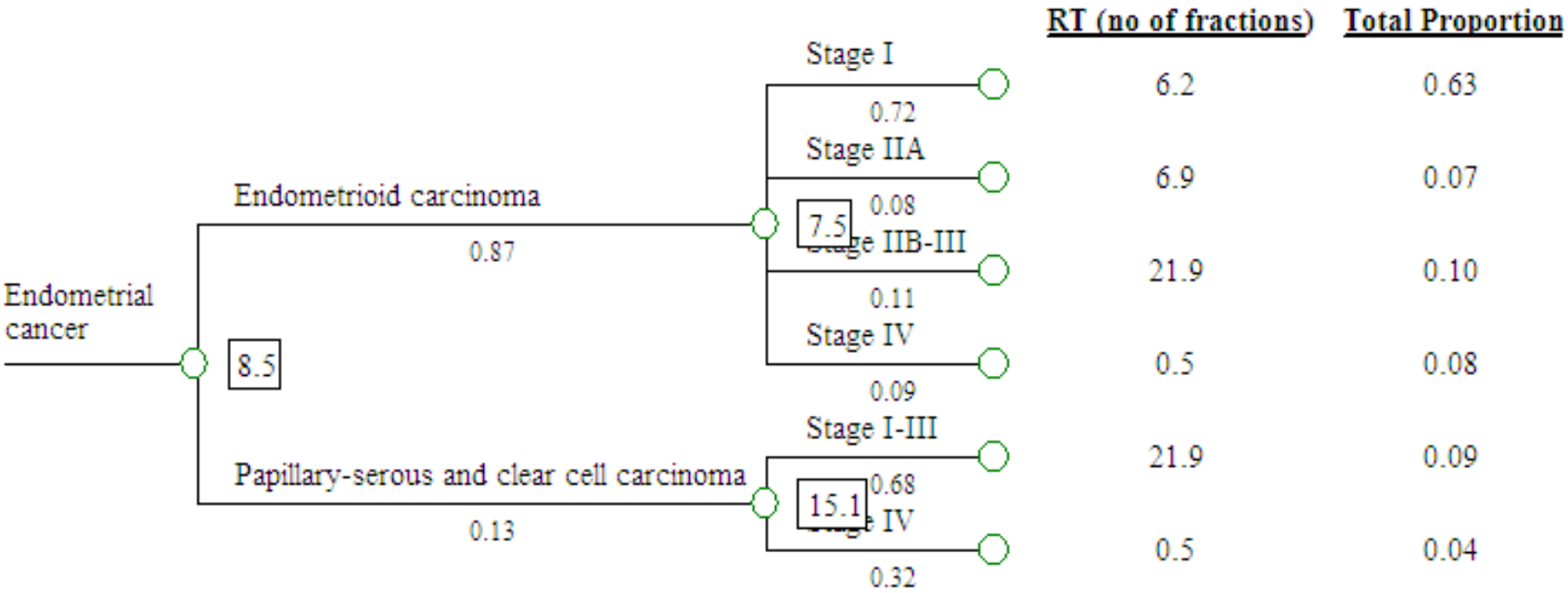

Figure 2. Endometrial cancer. Optimal fractionation tree

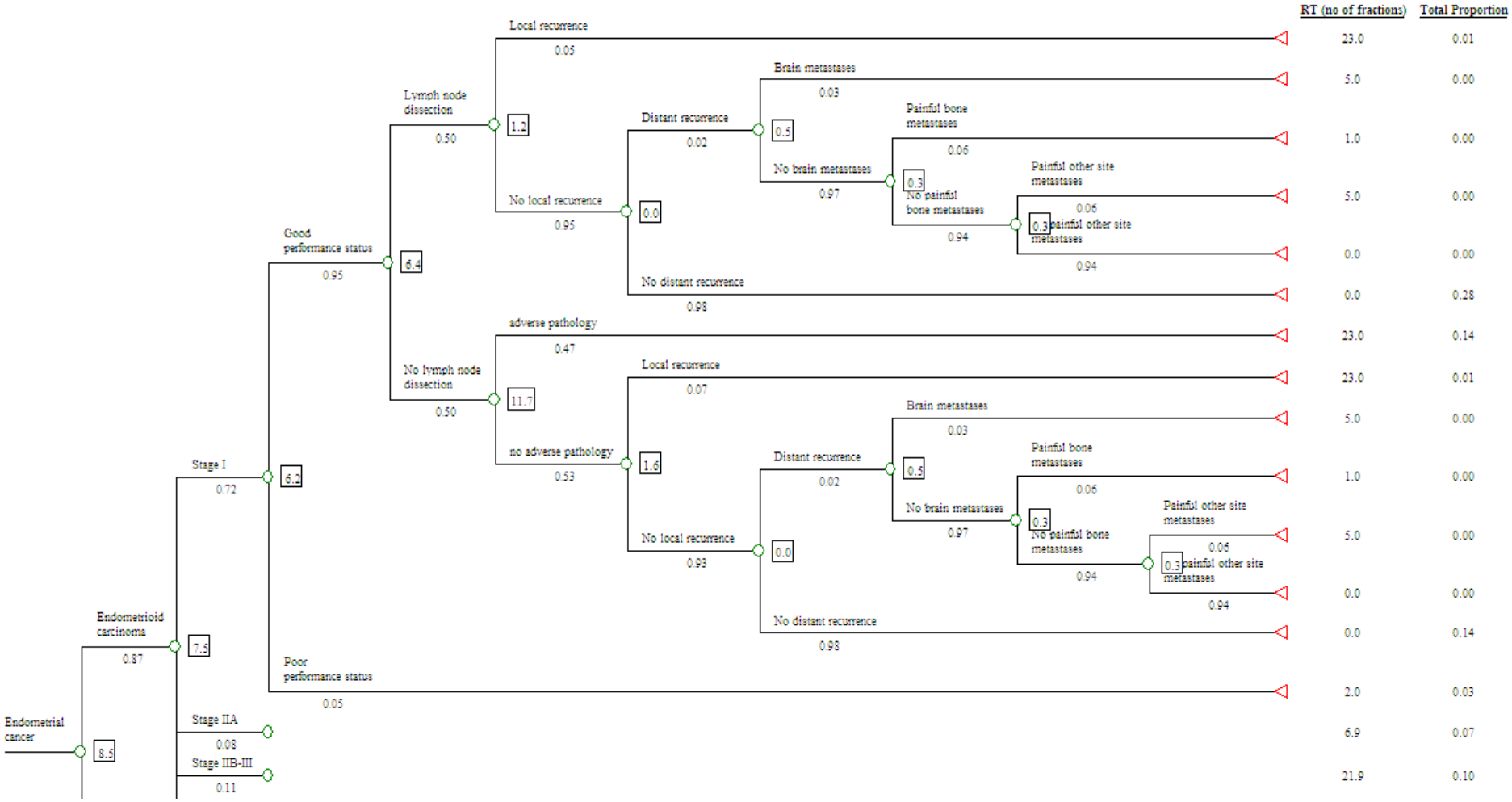

Figure 3. Stage I endometrioid cancer. Optimal fractionation tree

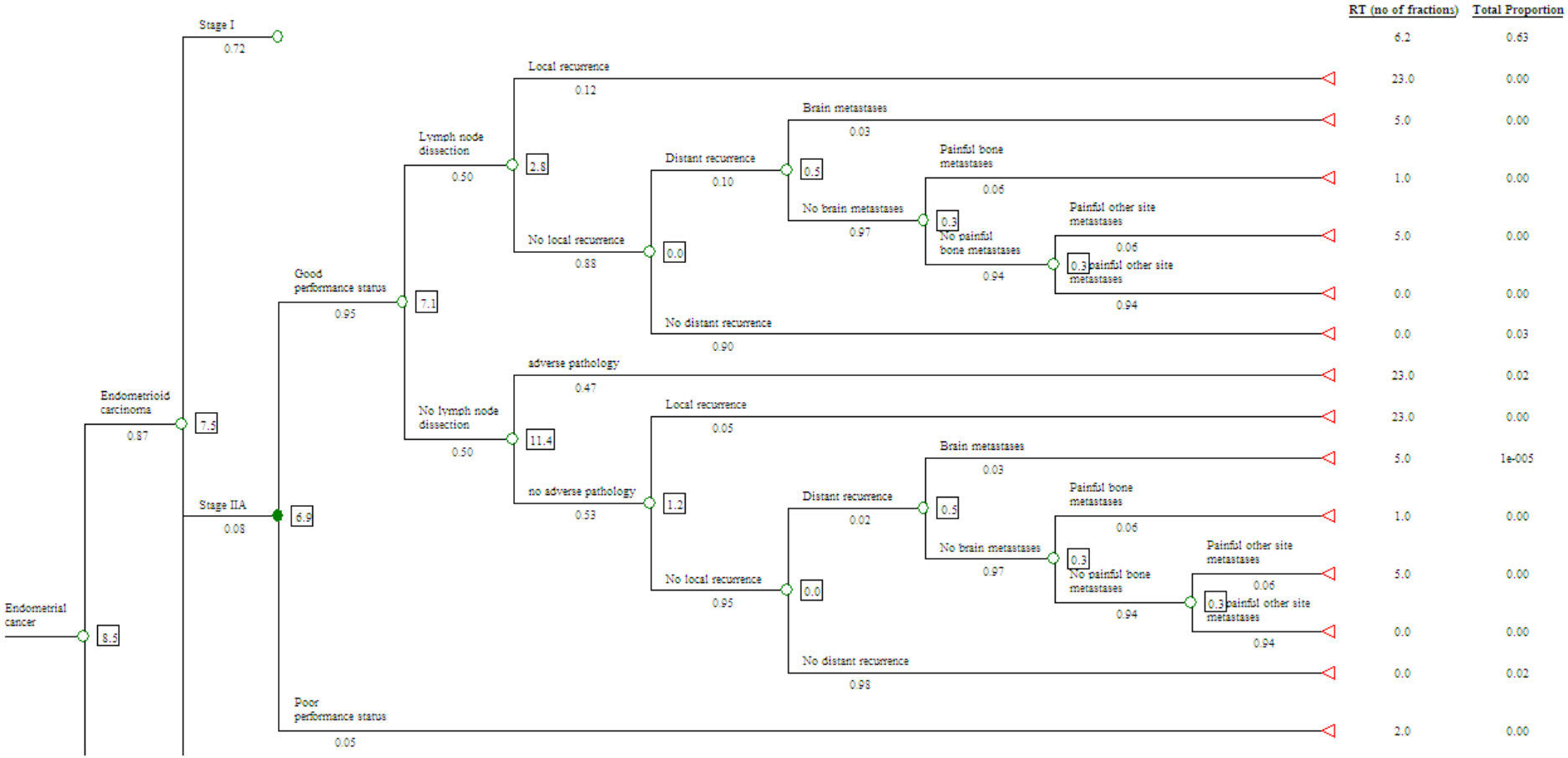

Figure 4. Stage IIA endometrioid cancer. Optimal fractionation tree

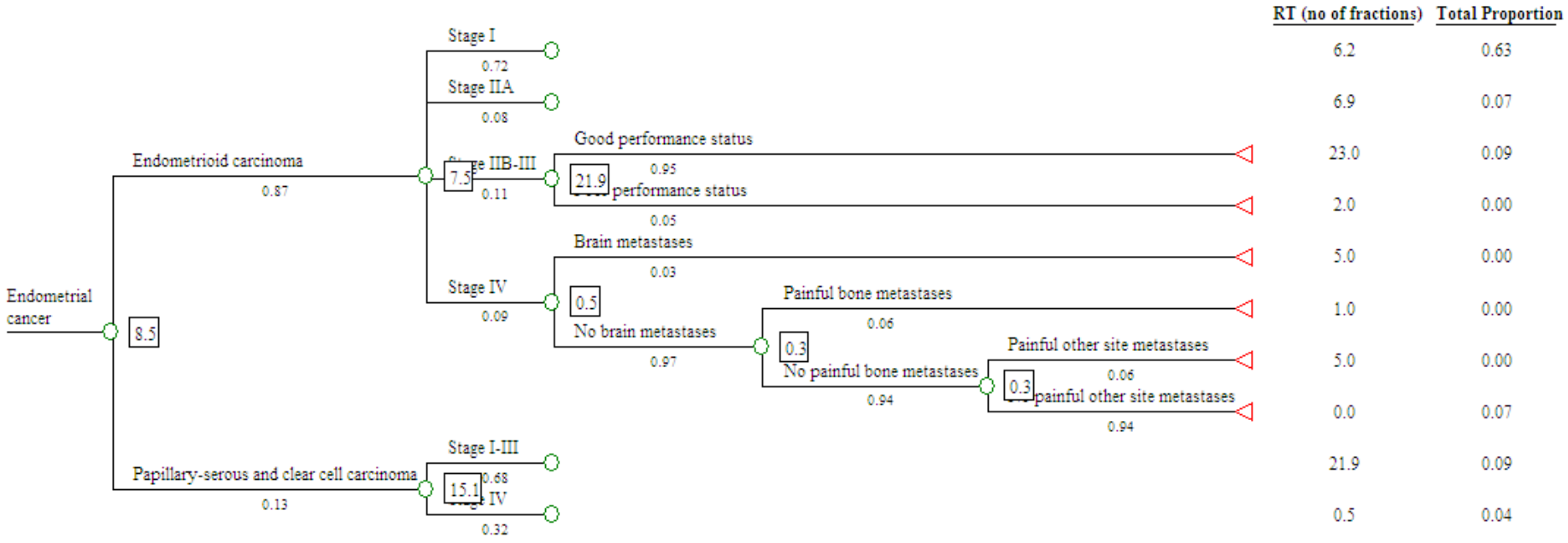

Figure 5. Stage IIB-IV endometrioid cancer. Optimal fractionation tree

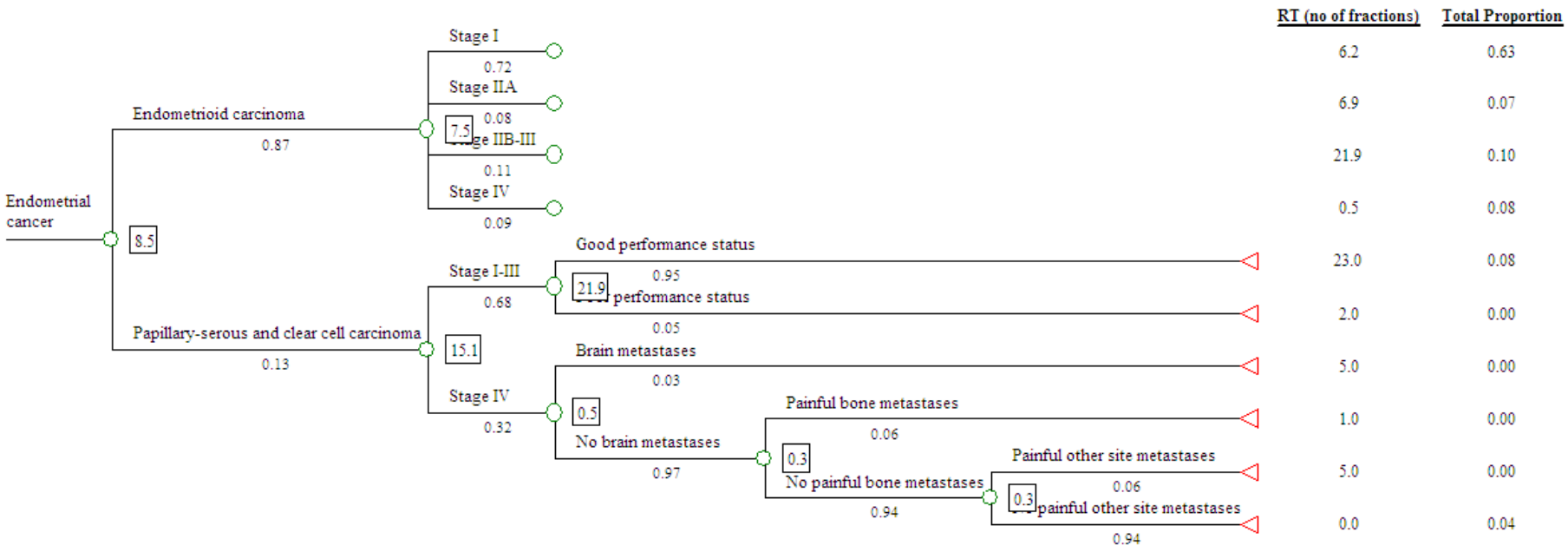

Figure 6. Papillary serous and clear cell endometrial cancer. Optimal fractionation tree

9.3 Ovarian Cancer

Table 1. Ovarian Cancer. Number of fractions of radiotherapy - Sources of evidence

Outcome no (utilisation model)c	Clinical scenario (utilisation model)	Outcome no (fractionation model)	Clinical scenario (addition to fractionation model)	No of fractions	Range of no of fractions	Level of evidence	References	Notes	Proportion of all ovarian cancer patients
1	Stage IV, bone/lymph node/CNS metastases	1	Bone metastases	1	1−5	I	RCR guidelines (18)	3	0.01
		2	Lymph node metastases	10	10−14	III	Corn et al (324) E et al (325)	4	0.03
		3	CNS metastases	5	5−10	II	RCR guidelines (18)	5	0.01

Proportion of all ovarian cancer patients in whom radiotherapy is recommended	**0.04 (4%)**
Proportion of all cancer patients = 0.04 x 0.012 =	**0.0005 (0.05%)**
Average number of fractions per ovarian cancer patient	**0.3**
Average number of fractions per treatment course = 0.3/0.04 =	**7.5**

Key to abbreviations in ovarian cancer decision tree and tables

CNS – Central nervous system

RCR – Royal College of Radiologists

Table 2. Ovarian Cancer. The incidence of attributes used to define number of radiotherapy fractions

Key	Population or subpopulation of interest	Attribute	Proportion of populations with this attribute	Quality of Information	References	Notes
A	All registry cancers	Ovarian cancer	0.012	α	AIHW (16)	1
B	Ovarian cancer, Stage IV, bone/lymph node/CNS metastases	Bone metastases	0.15	λ	Dauplat et al (326)	2
C	Ovarian cancer, Stage IV, bone/lymph node/CNS metastases	Lymph node metastases	0.67	λ	Dauplat et al (326)	2
D	Ovarian cancer, Stage IV, bone/lymph node/CNS metastases	CNS metastases	0.18	λ	Dauplat et al (326)	2

Ovarian Cancer

The optimal radiotherapy fractionation model for ovarian cancer was based on the optimal radiotherapy utilisation model for gynaecological cancer (1, 299).

Treatment Guidelines

The following clinical practice guidelines for the management of ovarian cancer were identified:

- NHMRC clinical practice guidelines for the management of women with epithelial ovarian cancer (2004) (327)
- NSW Department of Health GMCT best clinical practice gynaecological cancer guidelines 2009 (2009) (286)
- SIGN guidelines on management of epithelial ovarian cancer (2003) (328)
- NCCN clinical practice guidelines on ovarian cancer (version 2.2011) (329)
- NCI PDQ guidelines on ovarian epithelial cancer (2010) (330)
- BC Cancer Agency gynaecology cancer management guidelines (epithelial carcinoma of the ovary) (2007) (331)
- FIGO Committee on Gynecologic Oncology: FIGO staging classifications and clinical practice guidelines in the management of gynaecologic cancers (2000) (302)

Explanatory Notes for Tables 1 and 2

1. Incidence of ovarian cancer

Ovarian cancer constituted 1.2% of all cancers occurring in Australia in 2005 (16).

2. Stage IV ovarian cancer: proportion of patients with bone, lymph node or central nervous system (CNS) metastases

In the optimal radiotherapy utilisation model, Delaney et al (1, 299) referred to the data reported by Dauplat et al (326) to estimate the proportion of patients with stage IV ovarian cancer with bone, lymph node or CNS metastases. In this retrospective review of 255 ovarian cancer patients treated at the UCLA Medical Center, 38% developed distant metastatic disease. Twenty-seven (11%) patients had bone, distant lymph node or CNS metastases. Of these patients, 4 (15%) had bone metastases, 18 (67%) had distant lymph node metastases and 5 (18%) had CNS metastases. In the model, these data were used to divide the branch of patients with bone, lymph node or CNS metastases into three branches: those with bone metastases (0.15), those with lymph node metastases (0.67) and those with CNS metastases (0.18).

3. Palliative radiotherapy for bone metastases: radiotherapy dose

A single fraction of 8 Gy was used in this model. A sensitivity analysis was performed to assess the impact of the range of number of fractions (1 to 5 fractions) on the average number of fractions per ovarian cancer patient (see chapter 18).

4. Palliative radiotherapy for lymph node metastases: radiotherapy dose

The NHMRC guidelines on ovarian cancer (327) state that symptomatic relief and palliation in women with metastatic disease can be achieved with radiation therapy but have not recommended specific dose fractionation schedules. The guidelines make reference to the study reported by Corn et al (324). They retrospectively reviewed 33 patients with ovarian cancer treated with palliative radiotherapy at the Fox Chase Cancer Center, Philadelphia, between 1987 and 1993. Sites irradiated included the pelvis, abdomen, chest and brain. The median dose was 35 Gy (range 7.5 to 45 Gy). The median dose per fraction was 2.5 Gy (range 1 to 5 Gy). Complete palliative response was 51% and overall palliative response was 79%. The median duration of palliation was 4 months. The likelihood of obtaining complete symptomatic response was significantly increased among those who received a higher biologically effective dose. The authors recommended that biologically effective doses of at least 44

Gy_{10} (e.g., 35 Gy in 14 fractions) should be sought to maximise the probability of complete response.

E et al (325) retrospectively reviewed patients treated with palliative radiotherapy for symptomatic ovarian cancer at the Ottawa Hospital Regional Cancer Centre between 1990 and 2003. Sixty-two courses of radiotherapy were delivered to 53 patients. The symptoms treated included bleeding, pain, lymphoedema and respiratory symptoms. The most common dose fractionation schedule used was 30 Gy in 10 fractions (range 5 Gy in 1 fraction to 52.5 Gy in 20 fractions). The overall response rate was 100%. The median duration of response was 4.8 months (range 1 to 71 months). No dose response was demonstrated.

In the model, the dose fractionation schedule, 30 Gy in 10 fractions, was used in patients recommended to have palliative radiotherapy for distant lymph node metastases. A sensitivity analysis was performed to assess the impact of the range of number of fractions (10 to 14 fractions) on the average number of fractions per ovarian cancer patient.

5. Palliative radiotherapy for brain metastases: radiotherapy dose

The dose fractionation schedule, 20 Gy in 5 fractions, was used in this model. A sensitivity analysis was performed to assess the impact of the range of number of fractions (5 to 10 fractions) on the average number of fractions per ovarian cancer patient (see chapter 18).

Sensitivity Analysis

The optimal number of fractions per ovarian cancer patient was 0.3.

There was a range of number of fractions considered appropriate in patients with stage IV ovarian cancer recommended to have palliative radiotherapy for distant lymph node metastases (10 to 14 fractions), for brain metastases (5 to 10 fractions) and for bone metastases (1 to 5 fractions)

To assess the impact of these uncertainties on the average number of radiotherapy fractions in ovarian cancer patients, a one-way sensitivity analysis was performed for these variables. The impact of these variables on the average number of radiotherapy fractions is illustrated by a tornado diagram (Fig. 1). The average number of radiotherapy fractions per ovarian cancer patient varied between 0.3 and 0.4. The optimal fractionation tree for ovarian cancer is shown in Fig. 2.

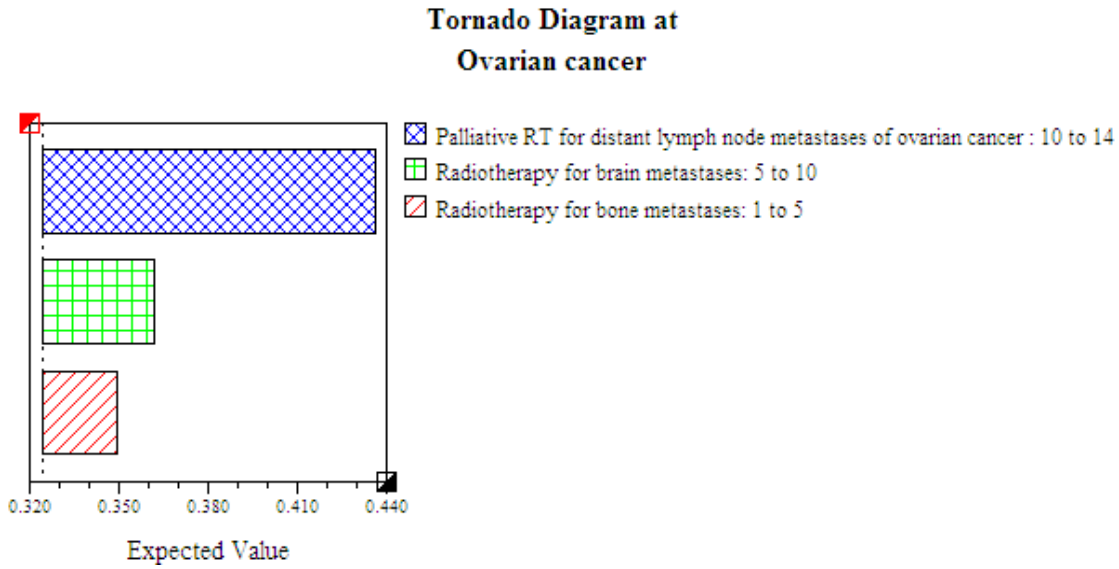

Figure 1. Ovarian cancer. Sensitivity analysis

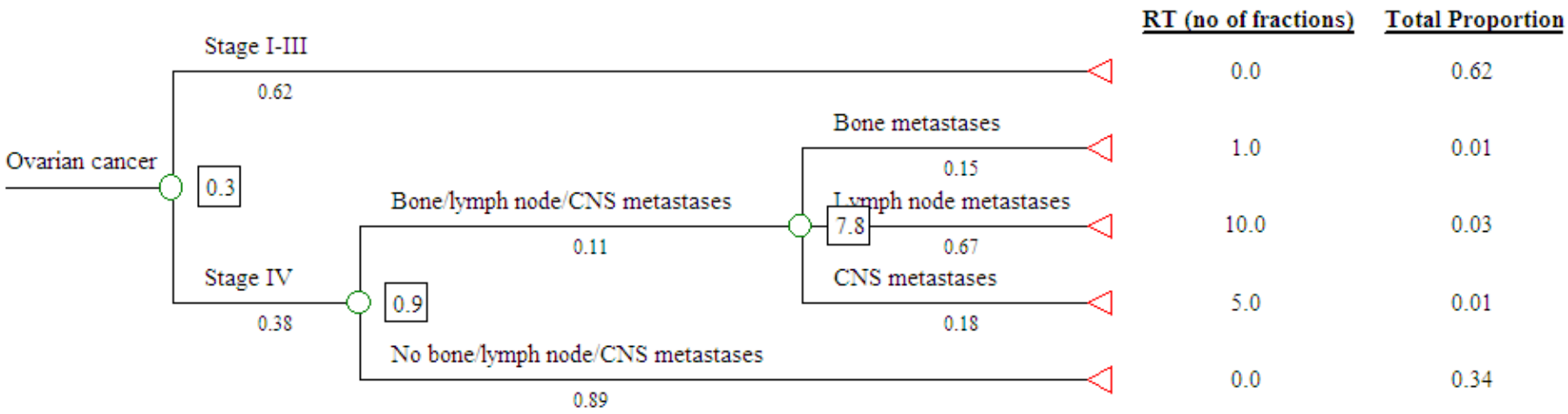

Figure 2. Ovarian cancer. Optimal fractionation tree

.

9.4 Vulvar Cancer

Table 1. Vulvar Cancer. Number of fractions of radiotherapy - Sources of evidence

Outcome no (utilisation model)a	Clinical scenario (utilisation mod	Outcome no (fractionation model)	Clinical scenario (addition to fractionation model)	No of fractions	Range of no of fractions	Level of evidence	References	Notes	Proportion of all vulvar cancer patients
1	Vulvar cancer, low risk, nodal recurrence after surgery	1	−	25	25−30	IV	Hruby et al (332) Piura et al (333)	4	0.01
2	Vulvar cancer, intermediate risk	2	−	25	23−33	II	GMCT guidelines (286) NCI guidelines (334) RCR guidelines (18)	2	0.18
3	Vulvar cancer, high risk	3	−	25	23−36	II, III	GMCT guidelines (286) NCI guidelines (334) RCR guidelines (18)	3	0.15

Proportion of all vulvar cancer patients in whom radiotherapy is recommended	**0.34 (34%)**
Proportion of all cancer patients = 0.34 x 0.003 =	**0.001 (0.1%)**
Average number of fractions per vulvar cancer patient	**8.6**
Average number of fractions per treatment course = 8.6/0.34 =	**25.3**

Key to abbreviations in vulvar cancer decision tree and tables

GMCT – Greater Metropolitan Clinical Taskforce

NCI – National Cancer Institute

RCR – Royal College of Radiologists

Table 2. Vulvar Cancer. The incidence of attributes used to define number of radiotherapy fractions

Key	Population or subpopulation of interest	Attribute	Proportion of populations with this attribute	Quality of Information	References	Notes
A	All registry cancers	Vulvar cancer	0.003	α	AIHW (16)	1

Vulvar Cancer

The optimal radiotherapy fractionation model for vulvar cancer was based on the optimal radiotherapy utilisation model for gynaecological cancer (1, 299).

Treatment Guidelines

The following clinical practice guidelines for the management of vulvar cancer were identified:

- NSW Department of Health GMCT best clinical practice gynaecological cancer guidelines 2009 (2009) (286)
- RCR radiotherapy dose-fractionation guidelines (2006) (18)
- NCI PDQ guidelines on vulvar cancer (2010) (334)
- BC Cancer Agency gynaecology cancer management guidelines (vulva) (2010) (335)
- FIGO Committee on Gynecologic Oncology: FIGO staging classifications and clinical practice guidelines in the management of gynaecologic cancers (2000) (302)

Explanatory Notes for Tables 1 and 2

1. Incidence of vulvar cancer

Vulvar cancer constituted 0.3% of all cancers occurring in Australia in 2005 (16).

2. Adjuvant radiotherapy for intermediate and high risk vulvar cancer: radiotherapy dose

The GMCT guidelines (286) recommend a dose of 50 Gy in 1.8 to 2 Gy per fraction (25 to 28 fractions) after a groin dissection with microscopic inguinal metastases. If there are multiple positive nodes or if there is evidence of

extracapsular extension, the guidelines state that higher doses up to 60 Gy may be given to a reduced volume. Given in 1.8 to 2 Gy per fraction, this dose is delivered in 30 to 33 fractions. The NCI PDQ guidelines on vulvar cancer (334) recommend a dose of 45 to 50 Gy. The RCR guidelines (18) recommend a dose of 45 Gy in 25 fractions. These guidelines justify their recommendations by making reference to the study reported by Homesley et al (336). In this GOG study, from 1977 to 1984, 114 patients with squamous cell carcinoma of the vulva and positive groin nodes after radical vulvectomy and bilateral groin lymphadenectomy were randomised to receive radiotherapy or pelvic node resection. Radiotherapy was delivered to the pelvis and both groins. Patients received 45 to 50 Gy in 1.8 to 2 Gy per fraction (23 to 28 fractions). There was a statistically significant improvement in survival in patients randomised to adjuvant radiotherapy.

The shortest dose fractionation schedule recommended in the GMCT guidelines, 50 Gy in 25 fractions, was used in the model. A sensitivity analysis was performed to assess the impact of the range of number of fractions (23 to 33 fractions) on the average number of fractions per vulvar cancer patient.

3. Chemoradiotherapy for high risk vulvar cancer: radiotherapy dose

Patients with high risk vulvar cancer are recommended to have primary chemoradiotherapy or adjuvant radiotherapy. The optimal dose fractionation schedule for adjuvant radiotherapy is 50 Gy in 25 fractions (range 23 to 33 fractions) (see note 2).

The NCI PDQ guidelines (334) state that for patients who are deemed unsuitable for surgery because of the extent of disease, radical radiotherapy may result in long-term survival, referring to data of four phase II trials of concurrent chemoradiotherapy which showed complete response rates of 53% to 89% for primary unresectable disease and for patients who would require exenterative surgery (337-340). The guidelines state that radiation complications of late fibrosis, atrophy, telangiectasia and necrosis are minimised if the dose per fraction is ≤ 1.8 Gy and excessive total doses are not

used. The guidelines recommend that doses of at least 54 Gy but less than 65 Gy should be used. Given in 1.8 Gy per fraction, this dose is delivered in 30 to 36 fractions. The RCR guidelines (18) recommend a dose of 60 to 65 Gy in 1.8 to 2 Gy per fraction (30 to 36 fractions).

The shortest dose fractionation schedule recommended in the GMCT guidelines, 50 Gy in 25 fractions, was used in the model for high risk vulvar cancer patients. A sensitivity analysis was performed to assess the impact of the range of number of fractions (23 to 36 fractions) on the average number of fractions per vulvar cancer patient.

4. Radiotherapy for nodal recurrence of low risk vulvar cancer: radiotherapy dose

In the optimal radiotherapy utilisation model, patients with low risk vulvar cancer with a nodal recurrence following surgery were recommended to have radiotherapy or surgery and adjuvant radiotherapy (1, 299).

The NCI PDQ guidelines (334) state that palliative radiotherapy is used in some patients with recurrent vulvar cancer. In the optimal radiotherapy utilisation model, of the patients with low risk vulvar cancer, 2% developed a nodal recurrence (1, 299). This recurrence rate was obtained from the study reported by Hacker et al (341). This was a large series of 177 cases of stage I vulvar carcinoma treated with radical surgery at the University of California, USA. Four patients (2%) developed a nodal recurrence. These patients had no metastatic disease at the time of recurrence and were treated with radical intent. In this model, all patients with low risk vulvar cancer with a nodal recurrence were recommended to have treatment with radical intent. It is estimated that only a very small proportion of patients with nodal recurrence will have metastatic disease at the time of recurrence and are therefore treated with palliative intent. This is unlikely to significantly impact on the average number of fractions per vulvar cancer patient.

No specific dose fractionation schedules for recurrent vulvar cancer are recommended in the guidelines. Hruby et al (332) retrospectively reviewed 26 patients with recurrent vulvar cancer post-surgery who were referred to the Department of Radiation Oncology, Royal Prince Alfred Hospital, Australia, between 1982 and 1995. Sixteen patients were treated with surgery and adjuvant radiotherapy, 5 patients received radical radiotherapy +/- chemotherapy, and 5 patients received palliative radiotherapy. The patients treated with radical intent received a median dose of 50.4 Gy. Total doses ranged from 44 to 60 Gy in 22 to 30 fractions, the lower dose range was due to patients who did not complete the planned courses of radiotherapy. The majority of patients received planned courses of 50 to 60 Gy in 25 to 30 fractions. The overall survival for the entire cohort was 22% at 5 years.

Piura et al (333) retrospectively reviewed 73 patients with recurrent vulvar cancer post-surgery treated at the Regional Department of Gynaecological Oncology, Queen Elizabeth Hospital, England, between 1975 and 1990. Twelve patients had radiotherapy +/- surgery. The radiotherapy dose was 50 Gy. The overall 5-year survival for the entire group was 35%. Nine of 12 patients (75%) who received radiotherapy were dead of disease at follow-up.

The dose fractionation schedule, 50 Gy in 25 fractions, was used for patients with low risk vulvar cancer with a nodal recurrence based on published data. A sensitivity analysis was performed to assess the impact of the range of number of fractions (25 to 30 fractions) on the average number of fractions per vulvar cancer patient.

Sensitivity Analysis

The optimal number of fractions per vulvar cancer patient was 8.6.

A range of number of fractions was considered appropriate for intermediate risk vulvar cancer (23 to 33 fractions), high risk vulvar cancer (23 to 36 fractions), and nodal recurrence of low risk vulvar cancer (25 to 30 fractions).

To assess the impact of these uncertainties on the average number of radiotherapy fractions in vulvar cancer patients, a one-way sensitivity analysis was performed for each of these variables. The impact of these variables on the average number of radiotherapy fractions is illustrated by a tornado diagram (Fig. 1). The average number of radiotherapy fractions per vulvar cancer patient varied between 8.2 and 10.2. The optimal fractionation tree for vulvar cancer is shown in Fig. 2.

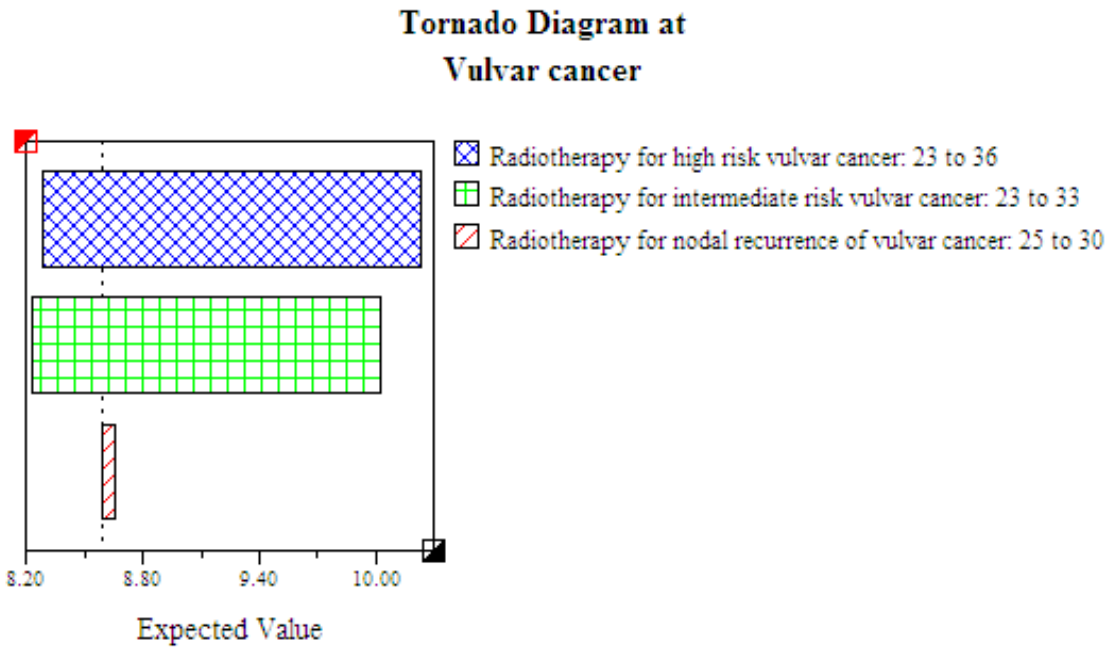

Figure 1. Vulvar cancer. Sensitivity analysis

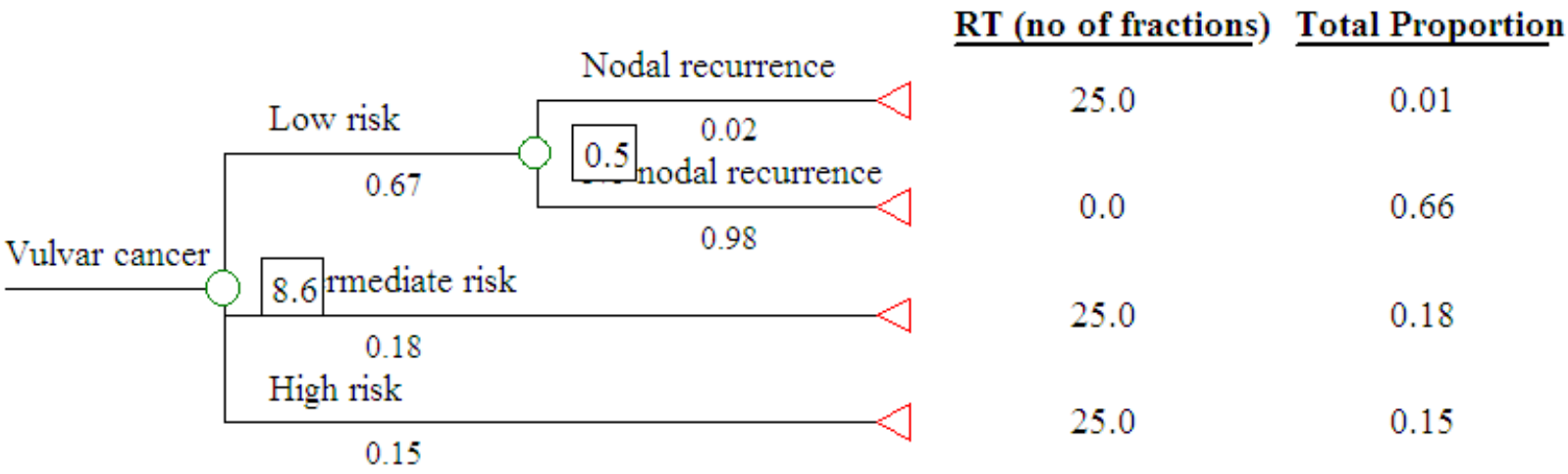

Figure 2. Vulvar cancer. Optimal fractionation tree

.

9.5 Vaginal Cancer

Table 1. Vaginal Cancer. Number of fractions of radiotherapy - Sources of evidence

Outcome no (utilisation model)	Clinical scenario (utilisation model)	Outcome no (fractionation model	Clinical scenario (addition to fractionation model)	No of fractions	Range of no of fractions	Level of evidence	References	Notes	Proportion of all vaginal cancer patients
1	Vaginal cancer	1	Stage I, surgery, clear margins, no local recurrence	0	–	–	–	–	0.05
		2	Stage I, surgery, clear margins, local recurrence	25	25–30	–	–	6	0.01
		3	Stage I, surgery, positive/close margins	25	–	IV	Stock et al (342)	3	0.03
		4	Stage I, no surgery	25	25–28	III	GMCT guidelines (286) BCCA guidelines (343)	4	0.32
		5	Stage II, surgery, clear margins, no local recurrence	0	–	–	–	–	0.02

Outcome no (utilisation model)	Clinical scenario (utilisation model)	Outcome no (fractionation model	Clinical scenario (addition to fractionation model)	No of fractions	Range of no of fractions	Level of evidence	References	Notes	Proportion of all vaginal cancer patients
		6	Stage II, surgery, clear margins, local recurrence	25	25−30	−	−	6	<0.01
		7	Stage II, surgery, positive/close margins	25	−	IV	Stock et al (342)	3	0.02
		8	Stage II, no surgery	25	25−28	III	GMCT guidelines (286) BCCA guidelines (343)	4	0.24
		9	Stage III/IVA	25	25−30	IV	GMCT guidelines (286) BCCA guidelines (343) NCI guidelines (344)	5	0.24
		10	Stage IVB	1	1−10	I, II, −	RCR guidelines (18)	7	0.07

Proportion of all vaginal cancer patients in whom radiotherapy is recommended	**0.94 (94%)**
Proportion of all cancer patients = 0.94 x 0.001 =	**0.0009 (0.09%)**
Average number of fractions per vaginal cancer patient	**21.7**
Average number of fractions per treatment course = 21.7/0.94 =	**23.1**

Key to abbreviations in vaginal cancer decision tree and tables

GMCT – Greater Metropolitan Clinical Taskforce

BCCA – British Columbia Cancer Agency

NCI – National Cancer Institute

RCR – Royal College of Radiologists

Table 2. Vaginal Cancer. The incidence of attributes used to define number of radiotherapy fractions

Key	Population or subpopulation of interest	Attribute	Proportion of populations with this attribute	Quality of Information	References	Notes
A	All registry cancers	Vaginal cancer	0.001	α	AIHW (16)	1
B	Vaginal cancer	Stage I	0.41	γ	Thompson et al (345)	2
C	Vaginal cancer, stage I	Surgery	0.21	γ	Thompson et al (345)	2
D	Vaginal cancer, stage I, surgery	Clear margins	0.66	γ	Thompson et al (345)	2
E	Vaginal cancer, stage I, surgery, clear margins	Local recurrence	0.15	ζ	Thompson et al (345)	2
F	Vaginal cancer	Stage II	0.28	γ	Thompson et al (345)	2
G	Vaginal cancer, stage II	Surgery	0.13	γ	Thompson et al (345)	2
H	Vaginal cancer, stage II, surgery	Clear margins	0.50	γ	Thompson et al (345)	2
I	Vaginal cancer, stage II, surgery, clear margins	Local recurrence	0.15	ζ	Thompson et al (345)	2
J	Vaginal cancer	Stage III-IVA	0.24	γ	Thompson et al (345)	2
K	Vaginal cancer	Stage IVB	0.07	γ	Thompson et al (345)	2

Vaginal Cancer

The optimal radiotherapy fractionation model for vaginal cancer was based on the optimal radiotherapy utilisation model for gynaecological cancer (1, 299), and the optimal brachytherapy utilisation model for vaginal cancer (345).

Treatment Guidelines

The following clinical practice guidelines for the management of vaginal cancer were identified:

- NSW Department of Health GMCT best clinical practice gynaecological cancer guidelines 2009 (2009) (286)
- NCI PDQ guidelines on vaginal cancer (2010) (344)
- BC Cancer Agency gynaecology cancer management guidelines (vagina) (2010) (343)
- FIGO Committee on Gynecologic Oncology: FIGO staging classifications and clinical practice guidelines in the management of gynaecologic cancers (2000) (302)

Explanatory Notes for Tables 1 and 2

1. Incidence of vaginal cancer

Vaginal cancer constituted 0.1% of all cancers occurring in Australia in 2005 (16).

2. Proportion of patients with vaginal cancer recommended to have radiotherapy

In the optimal radiotherapy utilisation model, all vaginal cancer patients were recommended to have radiotherapy (1, 299). The GMCT gynaecological cancer guidelines (286) state that radiotherapy is generally regarded as the mainstay of

treatment for vaginal cancer. In a select group of patients with small, early stage tumours permitting clear surgical margins, surgery appears to be effective.

The GMCT guidelines (286) recommend brachytherapy in combination with external beam radiotherapy, or surgery alone, as treatment options in stage I and II vaginal cancer. The NCI guidelines (344) also recommend brachytherapy with or without external beam radiotherapy, or surgery, as standard treatment options in stage I vaginal cancer. For stage II disease, these guidelines recommend brachytherapy in combination with external beam radiotherapy, or surgery, as standard treatment options. For both stage I and II disease, the NCI guidelines (344) recommend adjuvant radiotherapy in patients with close or positive surgical margins.

The optimal brachytherapy utilisation model for vaginal cancer (345) was adopted and adapted, in which patients with vaginal cancer were divided into four branches: stage I, stage II, stage III-IVA, and stage IVB disease. Branches were sub-divided taking into consideration the treatment options of surgery or radiotherapy in stage I and II disease. Patients with close or positive margins post-surgery were recommended to have adjuvant radiotherapy. In patients initially treated with surgery alone, radiotherapy was recommended for local recurrence in the absence of distant metastases.

3. Adjuvant external beam radiotherapy for stage I-II vaginal cancer: radiotherapy dose

The NCI guidelines (344) recommend adjuvant radiotherapy in cases with close or positive surgical margins but have not recommended specific dose fractionation schedules. The guidelines justify their recommendation by referring to the study reported by Stock et al (342). This was a retrospective study of 100 cases of primary carcinoma of the vagina treated at Magee-Women's Hospital of the University of Pittsburgh from 1962 to 1992. Treatment consisted of surgery in 40 patients, radiotherapy in 47 patients, and surgery and radiotherapy in 13 patients. The median dose of external beam radiotherapy was 50 Gy, the median dose per fraction was 2 Gy. The BC Cancer Agency

guidelines on vaginal cancer (343) state that external beam radiotherapy to the pelvis usually requires 5 weeks of daily visits, but have not made specific recommendations on dose fractionation schedules.

In this model, the dose fractionation schedule, 50 Gy in 25 fractions, was used for patients recommended to have adjuvant external beam radiotherapy after surgery for stage I-II vaginal cancer.

4. Radical radiotherapy for stage I-II vaginal cancer: radiotherapy dose

The GMCT guidelines (286) recommend a dose of 50 Gy in 1.8 to 2 Gy per fraction (25 to 28 fractions), and state that doses less than 50 Gy have been found to be less effective (346). The BC Cancer Agency guidelines (343) state that external beam radiotherapy to the pelvis usually requires 5 weeks of daily visits but have not made specific recommendations on dose fractionation schedules.

In the model, the dose fractionation schedule, 50 Gy in 25 fractions, was used for patients recommended to have radical radiotherapy for stage I-II vaginal cancer. A sensitivity analysis was performed to assess the impact of the range of number of fractions (25 to 28 fractions) on the average number of fractions per vaginal cancer patient.

5. Radical radiotherapy for stage III/IVA vaginal cancer: radiotherapy dose

The GMCT guidelines (286) recommend a dose of 50 Gy in 1.8 to 2 Gy per fraction (25 to 28 fractions), and state that doses less than 50 Gy have been found to be less effective (346). The BC Cancer Agency guidelines (343) state that external beam radiotherapy to the pelvis usually requires 5 weeks of daily visits.

The NCI guidelines (344) recommend external beam radiotherapy for a period of 5 to 6 weeks followed by brachytherapy to deliver a total tumour dose of 75 to

80 Gy and a dose to the lateral pelvic wall of 55 to 60 Gy. In 1.8 to 2 Gy per fraction, this dose is delivered in 30 fractions. The guidelines justify their recommendation by making reference to the study reported by Perez et al (347). In this study, patients with stage III and IVA vaginal cancer were treated with brachytherapy and external beam radiotherapy to deliver a total dose of 55 to 60 Gy to the lateral pelvic wall.

In this model, the dose fractionation schedule, 50 Gy in 25 fractions, was used for patients recommended to have radical radiotherapy for stage III and IVA vaginal cancer. A sensitivity analysis was performed to assess the impact of the range of number of fractions (25 to 30 fractions) on the average number of fractions per vaginal cancer patient.

6. Radical radiotherapy for local recurrence of vaginal cancer: radiotherapy dose

No specific dose fractionation schedules for locally recurrent vaginal cancer are recommended in the guidelines. In this model, the same dose fractionation schedule used for stage III/IVA vaginal cancer, 50 Gy in 25 fractions, was used. A sensitivity analysis was performed to assess the impact of the range of number of fractions (25 to 30 fractions) on the average number of fractions per vaginal cancer patient.

7. Palliative radiotherapy for stage IVB vaginal cancer: radiotherapy dose

In patients with metastatic vaginal cancer, radiotherapy is used for palliation of brain metastases, bone metastases and local symptoms. The proportion of patients with stage IVB vaginal cancer with symptomatic brain metastases, bone metastases or local disease could not be identified despite an extensive literature search.

The RCR guidelines (18) recommend 20 Gy in 5 fractions and 30 Gy in 10 fractions for brain metastases, and 8 Gy in 1 fraction and 20 Gy in 5 fractions for bone metastases (see chapter 18).

No specific dose fractionation schedules for palliation of local disease are recommended in the guidelines. Despite an extensive literature search, evidence regarding the optimal dose fractionation schedule for palliation of local symptoms could not be identified, as vaginal cancer is an uncommon malignancy. Onsrud et al (295) retrospectively reviewed 64 patients with cervical or endometrial cancer treated with palliative radiotherapy at the University Hospital, Norway, between 1988 and 1998. The majority of patients received 20 Gy in 2 fractions. The success rate for control of bleeding was 90% and that for vaginal discharge was 39%. Extrapolating from these data, the dose fractionation schedule, 20 Gy in 2 fractions, was used for vaginal cancer patients recommended to have palliative radiotherapy for local disease.

In this model, for patients with stage IVB vaginal cancer, the shortest dose fractionation schedule, 8 Gy in 1 fraction, was used. This represented an under-estimate of the true optimal number of fractions for these patients, as a proportion of patients would have longer dose fractionation schedules for local symptoms or brain metastases. A sensitivity analysis was performed to assess the impact of the range of number of fractions (1 to 10 fractions) on the average number of fractions per vaginal cancer patient, and showed that this range had a very small impact on the average number of fractions per vaginal cancer patient (see sensitivity analysis below).

Sensitivity Analysis

The optimal number of fractions per vaginal cancer patient was 21.7.

As discussed by Thompson et al (345), there was one data element where there was uncertainty because of different proportions reported in the literature: the proportion of patients with stage I-II vaginal cancer treated surgically who suffered a local recurrence (0 to 0.29).

There was also a range of number of fractions considered appropriate for radical radiotherapy for stage I/II vaginal cancer (25 to 28 fractions), radical

radiotherapy for stage III/IVA vaginal cancer (25 to 30 fractions), radical radiotherapy for local recurrence of vaginal cancer (25 to 30 fractions), and palliative radiotherapy for stage IVB vaginal cancer (1 to 10 fractions).

To assess the impact of these uncertainties on the average number of radiotherapy fractions per vaginal cancer patient, a one-way sensitivity analysis was performed for each of these variables. The impact of these variables on the average number of radiotherapy fractions is illustrated by a tornado diagram (Fig.1). The average number of radiotherapy fractions per vaginal cancer patient varied between 21.4 and 23.4. The optimal fractionation tree for vaginal cancer is shown in Fig. 2.

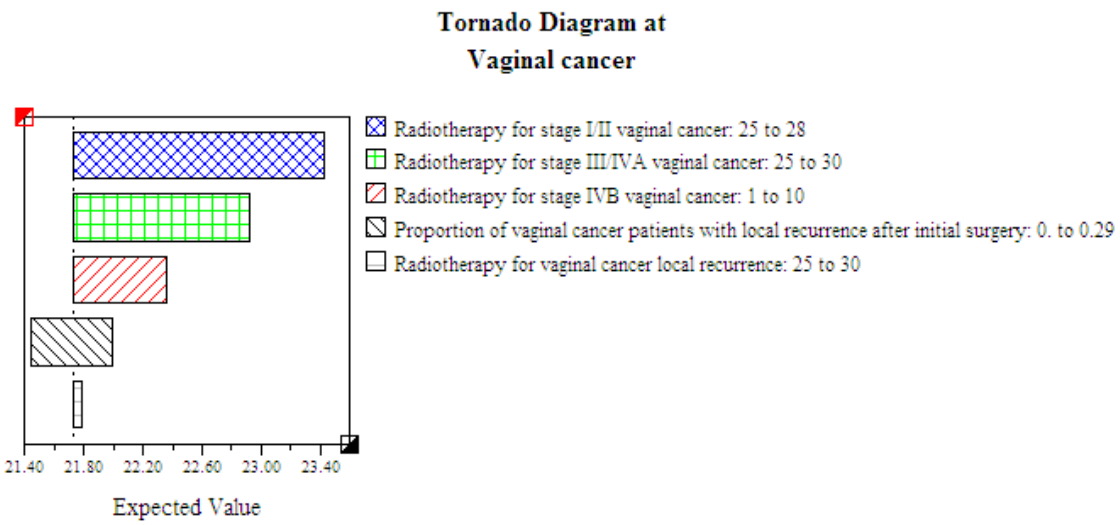

Figure 1. Vaginal cancer. Sensitivity analysis

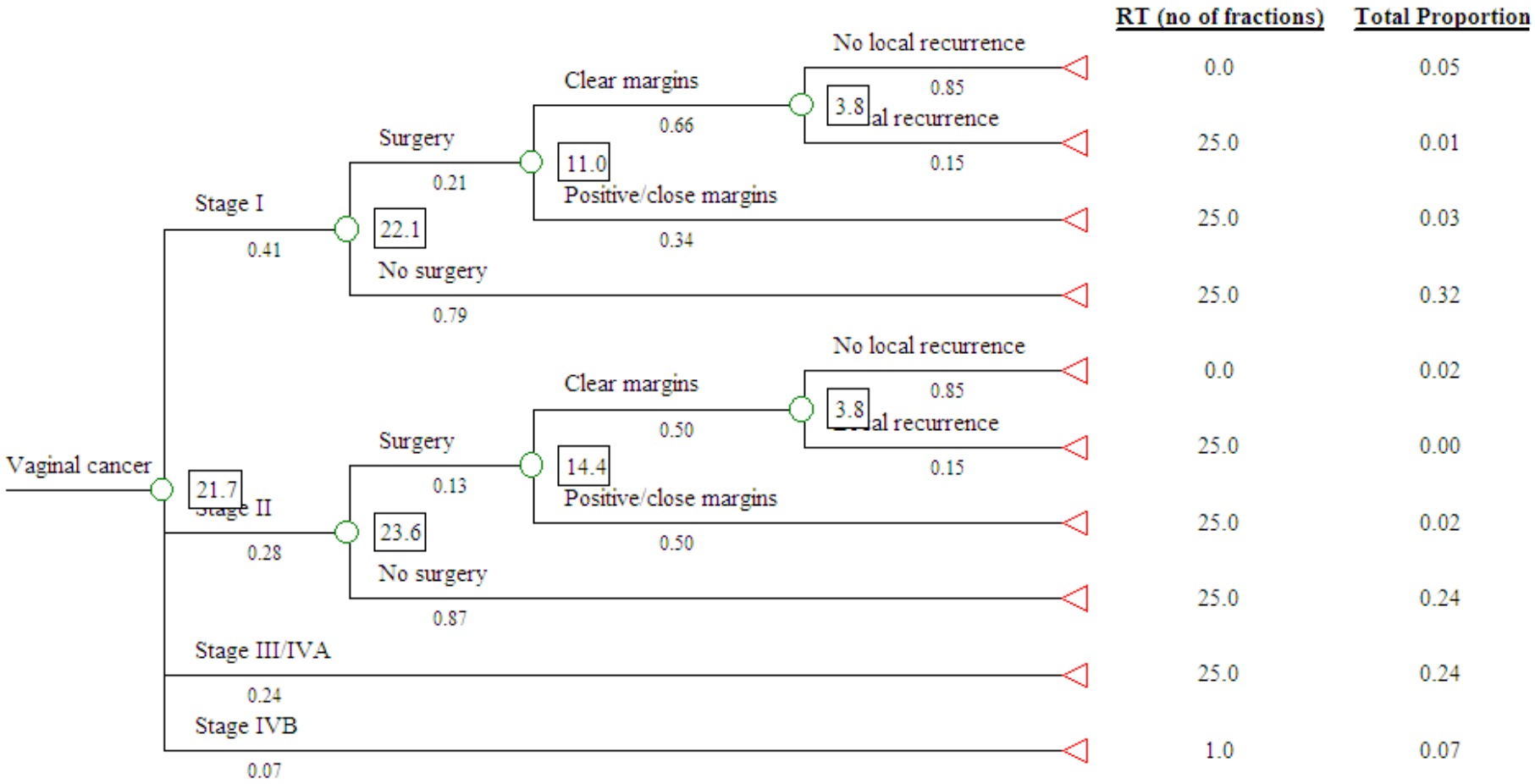

Figure 2. Vaginal cancer. Optimal fractionation tree

Chapter 10 Unknown Primary Cancer

Table 1. Unknown Primary Cancer. Number of fractions of radiotherapy – Sources of evidence

Outcome no (utilisation model)	Clinical scenario (utilisation model)	Outcome no (fractionation model)	Clinical scenario (addition to fractionation model)	No of fractions	Range of no of fractions	Level of evidence	References	Notes	Proportion of all unknown primary cancer patients
1	Unknown primary, brain metastases	1	−	5	5−10	II	RCR guidelines (18)	2	0.06
2	Unknown primary, no brain metastases, bone metastases	2	−	1	1−5	I	RCR guidelines (18)	3	0.27
3	Unknown primary, no brain metastases, no bone metastases, symptomatic node metastases	3	−	1	1−10	−	BCCA guidelines (348)	4	0.28

Proportion of all unknown primary cancer patients in whom radiotherapy is recommended	**0.61 (61%)**
Proportion of all cancer patients = 0.61 x 0.03 =	**0.018 (1.8%)**
Average number of fractions per unknown primary cancer patient	**0.9**
Average number of fractions per treatment course = 0.9/0.61 =	**1.5**

Key to abbreviations in unknown primary cancer decision tree and tables

RCR – Royal College of Radiologists

BCCA – British Columbia Cancer Agency

Table 2. Unknown Primary Cancer. The incidence of attributes used to define number of radiotherapy fractions

Key	Population or subpopulation of interest	Attribute	Proportion of populations with this attribute	Quality of Information	References	Notes
A	All registry cancers	Unknown primary cancer	0.03	α	AIHW (16)	1

Unknown Primary Cancer

The optimal radiotherapy fractionation model for unknown primary cancer was based on the optimal radiotherapy utilisation model for unknown primary cancer (1, 349). Carcinoma of unknown primary refers to disease in patients who present with metastatic carcinoma (most commonly adenocarcinoma of unknown primary and also including carcinoma not otherwise specified, poorly differentiated carcinoma or neuroendocrine carcinoma) for which the primary tumour site is not detected. This group of patients usually share common clinical characteristics such as rapid progression and random atypical metastases (350). As was the case in the optimal radiotherapy utilisation model, metastatic cervical squamous cell carcinoma of unknown primary origin was included in the head and neck cancer site in this model instead of the unknown primary cancer site. Metastatic cervical squamous cell carcinoma of unknown primary origin is a highly curable disease and treatment with surgery (neck dissection), radiotherapy to the head and neck region +/- chemotherapy, or a combination of these modalities with curative intent is recommended (351). Therefore, for the purposes of this model, it was considered more appropriate to include metastatic cervical squamous cell carcinoma of unknown primary origin in the head and neck cancer site.

Treatment Guidelines

The following clinical practice guidelines for the management of unknown primary cancer were identified:

- NICE guidelines on diagnosis and management of metastatic malignant disease of unknown primary origin (2010) (352)
- NCCN clinical practice guidelines on occult primary cancer (version 2.2011) (353)
- NCI PDQ guidelines on carcinoma of unknown primary (2010) (354)
- BC Cancer Agency cancer management guidelines on primary unknown cancer (2005) (348)

Explanatory Notes for Tables 1 and 2

1. Incidence of unknown primary cancer

Unknown primary cancer constituted 3.2% of all cancers occurring in Australia in 2005 (16).

2. Palliative radiotherapy for brain metastases: radiotherapy dose

The dose fractionation schedule, 20 Gy in 5 fractions, was used in the model. A sensitivity analysis was performed to assess the impact of the range of number of fractions (5 to 10 fractions) on the average number of fractions per unknown primary cancer patient (see chapter 18).

3. Palliative radiotherapy for bone metastases: radiotherapy dose

The dose fractionation schedule, 8 Gy in 1 fraction, was used in the model. A sensitivity analysis was performed to assess the impact of the range of number of fractions (1 to 5 fractions) on the average number of fractions per unknown primary cancer patient (see chapter 18).

4. Palliative radiotherapy for nodal metastases: radiotherapy dose

The BC Cancer Agency guidelines on primary unknown cancer (348) state that localised treatment such as radiotherapy or surgery should be considered for localised problems such as pain, obstruction, bleeding, cough or skin erosion. Depending on the overall condition of the patient, a course of palliative radiotherapy may vary from a single fraction to a two-week course with longer courses of fractionated treatment given under special circumstances.

No high level evidence exists regarding the optimal dose fractionation schedule for palliative radiotherapy for nodal metastases from an unknown primary cancer. The shortest dose fractionation schedule recommended in the guidelines, 8 Gy in 1 fraction, was used in this model. A sensitivity analysis was

performed to assess the impact of the range of number of fractions (1 to 10 fractions) on the average number of fractions per unknown primary cancer patient.

Sensitivity Analysis

The optimal number of fractions per unknown primary cancer patient was 0.9.

As discussed by Delaney et al (4-5), there was uncertainty regarding the data on the proportion of patients with unknown primary cancer and bone metastases because of different proportions reported in the literature (0.13 to 0.45). A range of number of fractions was also considered appropriate for palliative radiotherapy for brain metastases (5 to 10 fractions), bone metastases (1 to 5 fractions) and nodal metastases (1 to 10 fractions).

To assess the impact of these uncertainties on the average number of radiotherapy fractions per unknown primary cancer patient, a one-way sensitivity analysis was performed for these variables. The impact of these variables on the average number of radiotherapy fractions is illustrated by a tornado diagram (Fig. 1). The average number of radiotherapy fractions per unknown primary cancer patient varied between 0.8 and 3.4. This range is largely due to the range of number of fractions considered appropriate for radiotherapy for nodal metastases. The optimal fractionation tree for unknown primary cancer is shown in Fig. 2.

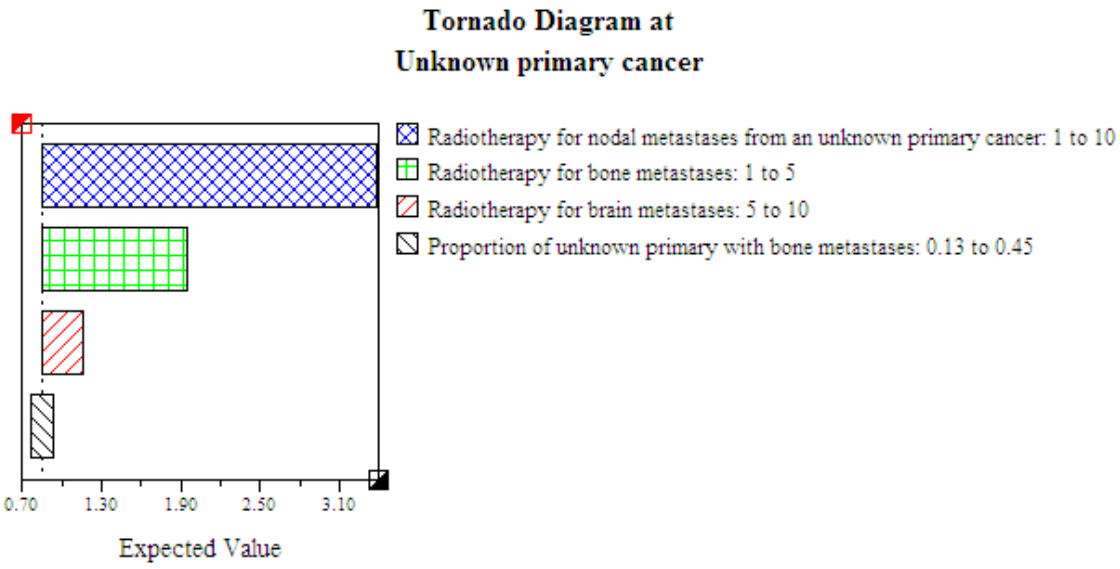

Figure 1. Unknown primary cancer. Sensitivity analysis

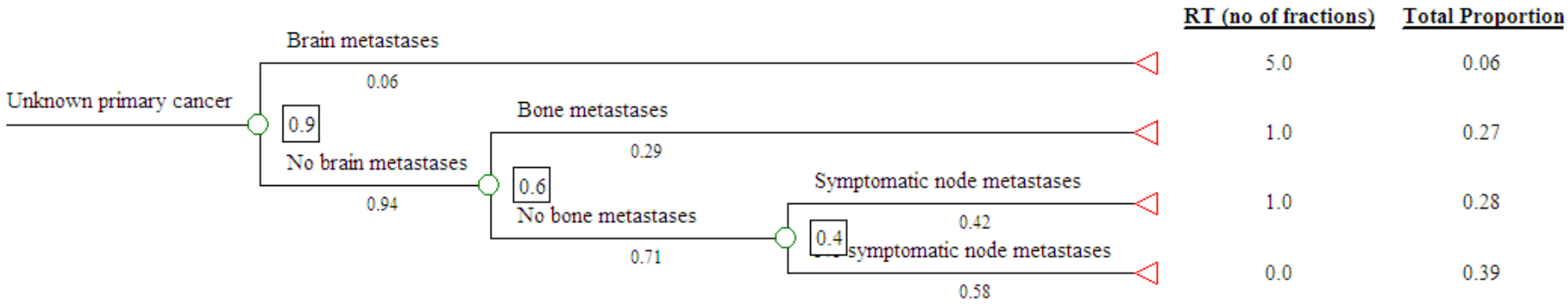

Figure 2. Unknown primary cancer. Optimal fractionation tree

Chapter 11 Head and Neck Cancer

Table 1. Head and Neck Cancer. Number of fractions of radiotherapy – Sources of evidence

Outcome no (utilisation model)	Clinical scenario (utilisation model)	Outcome no (fractionation model)	Clinical scenario (addition to fractionation model)	No of fractions	Range of no of fractions	Level of evidence	References	Notes	Proportion of all head and neck cancer patients
1	Oral cavity, stages I-II, surgery, adverse pathology	1	−	30	30−33	II	NCCN guidelines (351) SIGN guidelines (355) Cancer Care Ontario guidelines (356)	6	0.02
2	Oral cavity, stages I-II, surgery, no adverse pathology, locoregional recurrence	2	Surgery	30	30−33	−	NCCN guidelines (351)	7	0.01
		3	No surgery	33	33−68	−	NCCN guidelines (351)	7	0.00
4	Oral cavity, stages I-II, radiotherapy	5	−	35	33−37	II	NCCN guidelines (351)	3	0.01
5	Oral cavity, stages III-IV	6	Surgery	30	30–33	II	NCCN guidelines (351) SIGN guidelines (355) Cancer Care Ontario guidelines (356)	6	0.11

Outcome no (utilisation model)	Clinical scenario (utilisation model)	Outcome no (fractionation model)	Clinical scenario (addition to fractionation model)	No of fractions	Range of no of fractions	Level of evidence	References	Notes	Proportion of all head and neck cancer patients
		7	No surgery, ECOG 0-1	35	33–35	II	NCCN guidelines (351) RCR guidelines (18)	5	0.02
		8	No surgery, ECOG 2-3	33	33–68	II	NCCN guidelines (351) RCR guidelines (18)	3	0.02
6	Lip, cosmetically excisable, locoregional recurrence	9	−	10	10–37	IV	BCCA guidelines (357) NCCN guidelines (351)	15	0.02
8	Lip, not cosmetically excisable	11	–	10	10–37	IV	BCCA guidelines (357) NCCN guidelines (351)	15	0.02
9	Larynx, supraglottic, suitable for laryngeal conserving surgery, locoregional recurrence	12	–	30	30–33	–	NCCN guidelines (351)	9	0.00
11	Larynx, supraglottic, not suitable for	14	Stage I-II	35	33−37	II	NCCN guidelines (351)	3	0.02
		15	Stage III, ECOG	35	33–35	II	NCCN guidelines (351)	5	0.01

Outcome no (utilisation model)	Clinical scenario (utilisation model)	Outcome no (fractionation model)	Clinical scenario (addition to fractionation model)	No of fractions	Range of no of fractions	Level of evidence	References	Notes	Proportion of all head and neck cancer patients
	laryngeal conserving surgery		0-1				RCR guidelines (18)		
		16	Stage III, ECOG 2-3	33	33–68	II	NCCN guidelines (351) RCR guidelines (18)	3	0.01
		17	Stage IV, surgery	30	30–33	II	NCCN guidelines (351) SIGN guidelines (355) Cancer Care Ontario guidelines (356)	6	0.01
		18	Stage IV, no surgery, ECOG 0-1	35	33–35	II	NCCN guidelines (351) RCR guidelines (18)	5	0.00
		19	Stage IV, no surgery, ECOG 2-3	33	33–68	II	NCCN guidelines (351) RCR guidelines (18)	3	0.00
12	Larynx, glottic and subglottic, stages I-II, radiotherapy appropriate	20	–	28	16–35	II	NCCN guidelines (351) SIGN guidelines (355) RCR guidelines (18) Cancer Care Ontario	4	0.07

Outcome no (utilisation model)	Clinical scenario (utilisation model)	Outcome no (fractionation model)	Clinical scenario (addition to fractionation model)	No of fractions	Range of no of fractions	Level of evidence	References	Notes	Proportion of all head and neck cancer patients
							guidelines(358)		
13	Larynx, glottic and subglottic, stage III	22	ECOG 0-1	35	33–35	II	NCCN guidelines (351) RCR guidelines (18)	5	0.02
		23	ECOG 2-3	42	42-68	II	NCCN guidelines (351)	4	0.01
14	Larynx, glottic and subglottic, stage IV	24	Surgery	30	30–33	II	NCCN guidelines (351) SIGN guidelines (355) Cancer Care Ontario guidelines (356)	6	0.03
		25	No surgery, ECOG 0-1	35	33–35	II	NCCN guidelines (351) RCR guidelines (18)	5	0.01
		26	No surgery, ECOG 2-3	42	42-68	II	NCCN guidelines (351)	4	0.01
15	Oropharynx	27	Stage I-II	35	33−37	II	NCCN guidelines (351)	3	0.01
		28	Stage III, ECOG 0-1	35	33–35	II	NCCN guidelines (351) RCR guidelines (18)	5	0.04
		29	Stage III, ECOG 2-3	33	33–68	II	NCCN guidelines (351) RCR guidelines (18)	3	0.03

Outcome no (utilisation model)	Clinical scenario (utilisation model)	Outcome no (fractionation model)	Clinical scenario (addition to fractionation model)	No of fractions	Range of no of fractions	Level of evidence	References	Notes	Proportion of all head and neck cancer patients
16	Salivary gland, stage I-II, low grade, node positive	30	–	30	30–33	III	NCCN guidelines (351)	16	0.00
17	Salivary gland, stage I-II, low grade, node negative, locoregional recurrence	31	–	30	30–39	III	NCCN guidelines (351)	17	0.00
19	Salivary gland, high grade	33	–	30	30–33	III	NCCN guidelines (351)	16	0.03
20	Salivary gland, stage III-IV	34	–	30	30–33	III	NCCN guidelines (351)	16	0.02
21	Hypopharynx	35	Stage I-II	35	33−37	II	NCCN guidelines (351)	3	0.01
		36	Stage III-IV, ECOG 0-1	35	33–35	II	NCCN guidelines (351) RCR guidelines (18)	5	0.02
		37	Stage III-IV, ECOG 2-3	33	33–68	II	NCCN guidelines (351) RCR guidelines (18)	3	0.02

Outcome no (utilisation model)	Clinical scenario (utilisation model)	Outcome no (fractionation model)	Clinical scenario (addition to fractionation model)	No of fractions	Range of no of fractions	Level of evidence	References	Notes	Proportion of all head and neck cancer patients
22	Paranasal sinus	38	Surgery	30	30–33	II	NCCN guidelines (351)	18	0.04
		39	No surgery	33	33–68	II	NCCN guidelines (351)	18	0.01
23	Nasopharynx	40	Early stage disease	33	33−35	IV	NCCN guidelines (351)	19	0.01
		41	Advanced stage disease	35	−	II	NCCN guidelines (351)	19	0.03
24	Unknown primary, N1-2a, local or regional recurrence	41	−	33	33–37	IV	NCCN guidelines (351)	20	0.00
28	Unknown primary, N2b-N3	43	−	33	33–37	IV	NCCN guidelines (351)	20	0.02

Proportion of all head and neck cancer patients in whom radiotherapy is recommended	**0.74 (74%)**
Proportion of all cancer patients = 0.74 x 0.03 =	**0.022 (2.2%)**
Average number of fractions per head and neck cancer patient	**22.8**
Average number of fractions per treatment course = 22.8/0.74 =	**30.8**

Key to abbreviations in head and neck cancer decision tree and tables

NCCN – National Comprehensive Cancer Network

SIGN – Scottish Intercollegiate Guidelines Network

ECOG – Eastern Cooperative Oncology Group

RCR – Royal College of Radiologists

BCCA – British Columbia Cancer Agency

SA – South Australia

Table 2. Head and Neck Cancer. The incidence of attributes used to define number of radiotherapy fractions

Key	Population or subpopulation of interest	Attribute	Proportion of populations with this attribute	Quality of Information	References	Notes
A	All registry cancers	Head and neck cancer	0.03	α	AIHW (16)	1
B	Oral cavity cancer, stages I-II, surgery, no adverse pathology, locoregional recurrence	Surgery	0.75	ε	Wolfensberger et al (359)	7
C	Oral cavity cancer, stages III-IV	Surgery	0.72	β	SA Cancer Registry (360)	8
D	Oral cavity cancer, stages III-IV, no surgery	ECOG 0-1	0.57	ζ	List et al (361)	2
E	Supraglottic larynx cancer, not suitable for laryngeal conserving surgery	Stage I-II	0.33	ζ	Hinerman et al (362)	10
F	Supraglottic larynx cancer, not suitable for laryngeal conserving surgery	Stage III	0.29	ζ	Hinerman et al (362)	10
G	Supraglottic larynx cancer, not	Stage IV	0.38	ζ	Hinerman et al (362)	10

Key	Population or subpopulation of interest	Attribute	Proportion of populations with this attribute	Quality of Information	References	Notes
	suitable for laryngeal conserving surgery					
H	Supraglottic larynx cancer, not suitable for laryngeal conserving surgery, stage IV	Surgery	0.64	β	SA Cancer Registry (360)	11
I	Supraglottic larynx cancer, not suitable for laryngeal preserving surgery, stage IV, no surgery	ECOG 0-1	0.57	ζ	List et al (361)	2
J	Glottic and subglottic larynx cancer, stage III	ECOG 0-1	0.57	ζ	List et al (361)	2
K	Glottic and subglottic larynx cancer, stage IV	Surgery	0.64	β	SA Cancer Registry (360)	11
L	Glottic and subglottic larynx cancer, stage IV, no surgery	ECOG 0-1	0.57	ζ	List et al (361)	2
M	Oropharynx cancer	Stage I-II	0.10	ζ	Sundaram et al (363)	12
N	Oropharynx cancer, stage III-IV	ECOG 0-1	0.57	ζ	List et al (361)	2
O	Hypopharynx cancer	Stage I-II	0.14	ε	Hoffman et al (364)	13

Key	Population or subpopulation of interest	Attribute	Proportion of populations with this attribute	Quality of Information	References	Notes
P	Hypopharynx cancer, stage III-IV	ECOG 0-1	0.57	ζ	List et al (361)	2
Q	Paranasal sinus cancer	Surgery	0.71	ε	Dulguerov et al (365)	18
R	Nasopharyngeal cancer	Stage I	0.17	γ	SEER (172)	19

Head and Neck Cancer

The optimal radiotherapy fractionation model for head and neck cancer was based on the optimal radiotherapy utilisation model for head and neck cancer (1, 366).

Treatment Guidelines

The following clinical practice guidelines for the management of head and neck cancer were identified:

- NCCN clinical practice guidelines on head and neck cancer (version 2.2010) (351)
- NCI PDQ guidelines on laryngeal cancer (2010) (367)
- NCI PDQ guidelines on lip and oral cavity cancer (2010) (368)
- NCI PDQ guidelines on oropharyngeal cancer (2010) (369)
- NCI PDQ guidelines on nasopharyngeal cancer (2010) (370)
- NCI PDQ guidelines on metastatic squamous neck cancer with occult primary (2010) (371)
- BC Cancer Agency head and neck cancer management guidelines (2003) (357)
- Cancer Care Ontario guidelines on optimum radiation fractionation for T1N0 glottic (vocal cord) carcinoma (2005) (358)
- Cancer Care Ontario guidelines on hyperfractionated radiotherapy for locally advanced squamous cell carcinoma of the head and neck (2003) (372)
- Cancer Care Ontario guidelines on accelerated radiotherapy for locally advanced squamous cell carcinoma of the head and neck (2002) (373)
- Cancer Care Ontario guidelines on chemotherapy with radiotherapy for nasopharyngeal cancer (2004) (374)
- Cancer Care Ontario guidelines on the role of post-operative chemoradiotherapy for advanced squamous cell carcinoma of the head and neck (2004) (375)

- Cancer Care Ontario guidelines on the management of head and neck cancer in Ontario (2009) (356)
- RCR radiotherapy dose-fractionation guidelines (2006) (18)
- SIGN guidelines on diagnosis and management of head and neck cancer (2006) (355)

Explanatory Notes for Tables 1 and 2

1. Incidence of head and neck cancer

Head and neck cancer constituted 2.7% of all cancers occurring in Australia in 2005 (16).

2. Intent of treatment

For the purposes of the model, all patients recommended to have radiotherapy had treatment with radical intent. A very small proportion of patients with stage IV head and neck cancer have metastatic disease at diagnosis. This small proportion is unlikely to significantly impact on the average number of fractions for head and neck cancer patients.

In patients with cancer of the oral cavity, larynx, oropharynx and hypopharynx recommended to have definitive radiotherapy, the clinical guidelines recommend radiotherapy alone for early disease (351, 355-357, 367, 369). For advanced disease, the guidelines recommend concurrent chemoradiotherapy for those fit for chemotherapy, and altered fractionation regimens for patients who are unable to receive concurrent chemotherapy. The NCCN guidelines (351) recommend concurrent chemoradiotherapy for patients with good performance status of ECOG 0-1.

In this model, patients with stage III-IV cancer of the oral cavity, larynx, oropharynx and hypopharynx treated with definitive radiotherapy were divided into two branches according to performance status: ECOG 0-1 and ECOG 2-3. Patients with stage III-IV disease and ECOG 0-1 were recommended to have

concurrent chemoradiotherapy. Patients with stage III-IV disease and ECOG 2-3 were recommended to have radiotherapy alone in altered fractionation. Very few patients present with performance status of ECOG 4. The proportion of ECOG 4 patients is considered to be too small to significantly impact on the overall estimate of number of radiotherapy fractions.

List et al (361) examined two disease-specific quality-of-life measures for head and neck cancer patients. In this study, the majority (88%) of the 151 patients had stage III-IV head and neck cancer. Of the 101 patients treated at the University of Chicago Hospital with available performance status data, 57% had a Karnofsky score of 80-100 (ECOG 0-1) and 43% had a Karnofsky score of 40-70 (ECOG 2-3). These data were used in this model to divide patients with stage III-IV cancer of the oral cavity, larynx, oropharynx and hypopharynx treated with definitive radiotherapy into two branches: those with ECOG 0-1 (0.57) and those with ECOG 2-3 (0.43). It has been assumed that the performance status distribution for the various head and neck sub-sites is similar.

3. Definitive radiotherapy alone for cancer of the oral cavity, supraglottic larynx, oropharynx and hypopharynx: radiotherapy dose

In this model, patients with stage I-II cancer of the oral cavity, supraglottic larynx, oropharynx and hypopharynx were recommended to have radiotherapy alone in conventional fractionation. The NCCN guidelines (351) recommend 66 to 74 Gy in 33 to 37 fractions. In most of the large randomised trials of head and neck cancer, the radiotherapy dose 70 Gy in 35 fractions is used. For example, the Head and Neck Intergroup conducted a randomised trial on 295 patients with stage III-IV cancer of the oral cavity, oropharynx, larynx or hypopharynx (376). Patients were randomised to radiotherapy alone (70 Gy in 35 fractions) or chemoradiotherapy (same radiotherapy with cisplatin on days 1, 22 and 43 of radiotherapy) or split course radiotherapy with chemotherapy. The study showed that concurrent chemoradiotherapy (conventional single daily radiotherapy) significantly improved 3-year overall survival compared with radiotherapy alone in these patients with advanced disease.

In the optimal fractionation tree, the dose fractionation schedule, 70 Gy in 35 fractions, was used for patients recommended to have definitive radiotherapy for early stage cancer of the oral cavity, supraglottic larynx, oropharynx and hypopharynx. A sensitivity analysis was performed to assess the impact of the range of number of fractions (33 to 37 fractions) on the average number of fractions per head and neck cancer patient.

In this model, patients with stage III-IV cancer of the oral cavity, supraglottic larynx, oropharynx and hypopharynx and ECOG 2-3 were recommended to have radiotherapy alone in altered fractionation. The NCCN guidelines (351) recommend accelerated radiotherapy 66 to 74 Gy in 33 to 37 fractions (6 fractions per week), concomitant boost accelerated radiotherapy 72 Gy in 42 fractions over 6 weeks, and hyperfractionation 81.6 Gy in 68 fractions over 7 weeks. Randomised controlled studies have shown that these approaches result in improved local control compared with conventional fractionation (377-378). The RCR guidelines (18) recommend accelerated radiotherapy 66 to 68 Gy in 33 to 34 fractions (6 fractions per week) and concomitant boost accelerated radiotherapy 72 Gy in 42 fractions over 6 weeks. These guidelines state that hyperfractionation has not been widely adopted due to patient inconvenience, logistics and cost.

In the model, the shortest dose fractionation schedule, 66 Gy in 33 fractions, was used for patients recommended to have altered fractionation. A sensitivity analysis was performed to assess the impact of the range of number of fractions (33 to 68 fractions) on the average number of fractions per head and neck cancer patient.

4. Definitive radiotherapy alone for cancer of the glottic larynx: radiotherapy dose

For stage I-II disease, the NCCN guidelines (351) recommend a dose of 63 to 66 Gy in 28 to 33 fractions for T1N0 disease, and a dose of > 66 Gy in 2 Gy per fraction (> 33 fractions) for T1-2 disease. The SIGN guidelines (355)

recommend a dose of 53 to 55 Gy in 20 fractions or 50 to 52 Gy in 16 fractions. The RCR guidelines (18) recommend a dose of 64 to 70 Gy in 32 to 35 fractions. These guidelines also recommend 54 to 55 Gy in 20 fractions or 50 to 52.5 Gy in 16 fractions, but comment that short fractionation regimens remain a minority practice internationally, with a less robust evidence base than that for conventional treatment, making reference to the retrospective study of 200 patients with T1 glottic cancer treated at the Christie and Royal Marsden Hospitals (379). These patients were treated with a dose of 50 to 52.5 Gy in 16 fractions. The 5-year local control rate was 93%, and the 5-year cause specific survival was 97%.

The Cancer Care Ontario guidelines on optimum radiation fractionation for T1N0 glottic carcinoma (358) conclude that there is wide variation in the fractionation schedules used, and that there is insufficient evidence for the superiority of any one treatment schedule. They state that a four-week course of treatment appears safe and effective.

A more recently published Japanese randomised controlled study (380) of 180 patients with T1 glottic cancer compared conventional radiotherapy (60 to 66 Gy in 30 to 33 fractions, 2 Gy per fraction) with hypofractionated radiotherapy (56.25 Gy to 63 Gy in 25 to 28 fractions, 2.25 Gy per fraction) and showed a statistically significant improvement in the 5-year local control rate with the hypofractionated regimen.

The dose fractionation schedule, 63 Gy in 28 fractions, recommended in the NCCN guidelines (351) and supported by published randomised study data (380), was used for patients with stage I-II glottic cancer in this model. A sensitivity analysis was performed to assess the impact of the range of number of fractions (16 to 35 fractions) on the average number of fractions per head and neck cancer patient.

For patients with advanced disease not fit for chemotherapy, the NCCN guidelines (351) recommend concomitant boost accelerated radiotherapy 72 Gy in 42 fractions over 6 weeks, and hyperfractionation 81.6 Gy in 68 fractions over

7 weeks. In the model, the shortest dose fractionation schedule, 72 Gy in 42 fractions, was used for glottic cancer patients recommended to have altered fractionation. A sensitivity analysis was performed to assess the impact of the range of number of fractions (42 to 68 fractions) on the average number of fractions per head and neck cancer patient.

5. Chemoradiotherapy for cancer of the oral cavity, larynx, oropharynx and hypopharynx: radiotherapy dose

For concurrent chemoradiotherapy, the RCR guidelines (18) recommend 66 to 70 Gy in 33 to 35 fractions. The NCCN guidelines (351) state that there is no consensus regarding the optimal dose fractionation schedule, and that most published studies have used conventional fractionation at 2 Gy per fraction to 70 Gy or more.

In this model, the dose fractionation schedule, 70 Gy in 35 fractions, was used for concurrent chemoradiotherapy for stage III-IV cancer of the oral cavity, larynx, oropharynx and hypopharynx. A sensitivity analysis was performed to assess the impact of the range of number of fractions (33 to 35 fractions) on the average number of fractions per head and neck cancer patient.

6. Post-operative radiotherapy for cancer of the oral cavity, larynx, oropharynx and hypopharynx

The NCCN guidelines (351) recommend a dose of 60 to 66 Gy in 30 to 33 fractions. The SIGN guidelines (355) and the Cancer Care Ontario guidelines on the management of head and neck cancer in Ontario (356) recommend a dose of 54 to 60 Gy in 27 to 30 fractions, with a boost to areas of very high risk to a total dose of 66 Gy in 33 fractions. Doses of 60 to 66 Gy in 30 to 33 fractions were used in randomised controlled studies comparing chemoradiotherapy with radiotherapy alone in the post-operative setting in patients with cancer of the oral cavity, oropharynx, larynx or hypopharynx (381-382).

The shortest dose fractionation schedule, 60 Gy in 30 fractions, was used in the model. A sensitivity analysis was performed to assess the impact of the range of number of fractions (30 to 33 fractions) on the average number of fractions per head and neck cancer patient.

7. Cancer of the oral cavity, stage I-II, locoregional recurrence after initial surgery: proportion of patients having salvage surgery and radiotherapy dose

In the optimal radiotherapy utilisation model (1, 366), all patients who develop a recurrence after surgery alone were depicted having radiotherapy (alone or in combination with surgery). For locoregionally recurrent head and neck cancer, the NCCN guidelines (351) recommend surgery and post-operative radiotherapy for resectable recurrence and definitive radiotherapy +/- chemotherapy for unresectable recurrence.

Delaney et al (1, 366) made reference to the prospective study by Wolfensberger et al (359) of 93 patients with early stage oral cavity cancer treated with surgery. Of these, 19% developed locoregional recurrence. Of the 16 patients who received treatment at recurrence, 12 patients (75%) underwent re-operation. This proportion was used in this model to divide patients with locoregional recurrence into two branches: patients who undergo further surgery followed by post-operative radiotherapy (0.75), and those who undergo radiotherapy alone (0.25).

For patients with locoregional recurrence, the NCCN guidelines (351) recommend the same dose fractionation schedules as used in the primary setting. In the model, the dose fractionation schedule, 60 Gy in 30 fractions, was used for post-operative radiotherapy. A sensitivity analysis was performed to assess the impact of the range of number of fractions (30 to 33 fractions) on the average number of fractions per head and neck cancer patient. No data were available to divide the branch of patients treated with definitive radiotherapy for locoregional recurrence according to performance status. Therefore, in this model, the dose fractionation schedule, 66 Gy in 33 fractions,

was used for definitive radiotherapy. A sensitivity analysis was performed to assess the impact of the range of number of fractions (33 to 68 fractions) on the average number of fractions per head and neck cancer patient (see notes 3, 5 and 6).

8. Cancer of the oral cavity, stage III-IV: proportion of patients having surgery

All patients with stage III-IV cancer of the oral cavity were recommended having radiotherapy in the optimal radiotherapy utilisation model (1, 366). The BC Cancer Agency guidelines on head and neck cancers (357) state that for advanced oral cavity cancer, the primary curative treatment is usually a combination of surgery and radiotherapy. Patients who are unfit for surgery or deemed unresectable are treated with radiotherapy. The SIGN guidelines (355) also recommend surgical resection for patients with resectable disease who are fit for surgery, and radical radiotherapy for patients whose disease cannot be adequately resected, are unfit or do not wish to under surgery.

The 1987-1998 South Australia (SA) Cancer Registry data indicated that 72% of patients with stage III-IV oral cancer had surgery as part of their primary treatment (360). This proportion was used in the model to divide patients with stage III-IV cancer of the oral cavity into two branches: those who have surgery (0.72) and those who have no surgery (0.28).

9. Cancer of the supraglottic larynx, locoregional recurrence after laryngeal conserving surgery: proportion of patients having salvage surgery and radiotherapy dose

In the optimal radiotherapy utilisation model (1, 366), all patients with locoregional recurrence after laryngeal conserving surgery were depicted having radiotherapy. The NCI PDQ guidelines on laryngeal cancer (367) state that salvage is possible for failures of surgery alone, and further surgery and/or radiotherapy should be attempted. The NCCN guidelines (351) recommend

surgery +/- radiotherapy for resectable locoregional recurrences and radiotherapy +/- chemotherapy for unresectable recurrences.

Orus et al (383) reported on 115 patients with early stage supraglottic cancer. Of the 25 patients who were treated with partial laryngectomy, 4 patients (16%) developed local recurrence. All 4 patients (100%) underwent surgery for the recurrence. These are very small numbers of patients. An extensive literature search failed to identify other data on the proportion of patients with locoregional recurrence undergoing salvage surgery. In this model, all patients with locoregional recurrence were recommended to have surgery and adjuvant radiotherapy.

For patients with locoregional recurrence, the NCCN guidelines (351) recommend the same dose fractionation schedules as used in the primary setting. In the model, the dose fractionation schedule, 60 Gy in 30 fractions was used. A sensitivity analysis was performed to assess the impact of the range of number of fractions (30 to 33 fractions) on the average number of fractions per head and neck cancer patient (see note 6).

10. Cancer of supraglottic larynx, not suitable for laryngeal preserving surgery: stage distribution

In the optimal radiotherapy utilisation model (1, 366), all patients considered unsuitable for laryngeal preserving surgery were depicted having radiotherapy: definitive radiotherapy for stage I-III disease, and surgery and adjuvant radiotherapy or definitive radiotherapy for stage IV disease. Data from the study reported by Hinerman et al (362) were used to determine the proportion of patients with cancer of the supraglottic larynx unsuitable for laryngeal conserving surgery in the optimal radiotherapy utilisation model. Stage data were available for the entire cohort of 274 patients with supraglottic cancer, no separate data were reported for the 202 patients unsuitable for laryngeal preserving surgery. Of the entire cohort, 17 patients (6%) had stage I, 74 (27%) stage II, 79 (29%) stage III, and 104 (38%) stage IV disease. These data were used in this model to determine the proportion of patients with supraglottic

cancer unsuitable for laryngeal preserving surgery with stage I-II, stage III or stage IV disease.

11. Cancer of larynx (supraglottic, glottic and subglottic), not suitable for laryngeal preserving surgery, stage IV: proportion of patients having laryngectomy

Nguyen-Tan et al (384) reported on 223 patients with stage III-IV laryngeal cancer, of whom 101 had supraglottic cancer and 122 had glottic cancer. Overall, 161 patients (72%) had surgery as part of their management. The operative rates were not reported separately for the two sub-sites.

The 1987-1998 SA Cancer Registry data indicated that, of the 49 patients with stage IV laryngeal cancer who underwent treatment, 64% had surgery as part of the primary treatment (360). This proportion was used in the model to divide patients with stage IV laryngeal cancer into two branches: those who have surgery (0.64) and those who have no surgery (0.36). These data were chosen as they were Australian data and were more likely to reflect operative rates in other Australian treatment centres. It has been assumed that the operative rates are similar for the three laryngeal sub-sites.

12. Cancer of the oropharynx: stage distribution

Most patients with oropharyngeal cancer present with advanced disease. The 1987-1998 SA Cancer Registry data indicated that 10% of all pharyngeal cancers (nasopharyngeal, oropharyngeal and hypopharyngeal cancers) were stage I-II and 90% stage III-IV (360). Stage data for the respective sub-sites were not reported.

Sundaram et al (363) conducted a chart review of all patients diagnosed with cancer of the oropharynx who were seen at the Department of Otolaryngology, State University of New York Downstate Medical Center/Long Island College Hospital, New York, between 1990 and 2000. This study included 126 patients with cancer of all the oropharyngeal subsites (base of tongue, tonsil, uvula, soft

palate and posterior pharyngeal wall), of whom 112 had stage data available. Twelve patients (10%) had stage I-II disease, 100 patients (90%) had stage III-IV disease. These data were used in the model to divide patients with oropharyngeal cancer into two branches: those with stage I-II disease (0.90) and those with stage III-IV disease (0.10), as this study included patients with cancer of all sub-sites of the oropharynx.

13. Cancer of the hypopharynx: stage distribution

All patients with cancer of the hypopharynx were depicted having radiotherapy in the optimal radiotherapy utilisation model (1, 366). Most patients with hypopharyngeal cancer present with advanced disease. The 1987-1998 SA Cancer Registry data indicated that 10% of all pharyngeal cancers (nasopharyngeal, oropharyngeal and hypopharyngeal cancers) were stage I-II and 90% stage III-IV (360). Stage data for the respective sub-sites were not reported.

A survey conducted by the American College of Surgeons (364) of 2939 cases of hypopharyngeal cancer reported from 769 hospitals in the USA showed that 14% of patients presented with stage I-II disease. These data were used in the model to divide patients with hypopharyngeal cancer into two branches: stage I-II disease (0.14) and stage III-IV disease (0.86).

14. Cancer of the hypopharynx, stage III-IV: proportion of patients having surgery

The BC Cancer Agency guidelines (357) recommend the following options for stage III-IV hypopharyngeal cancer: i) concurrent chemoradiotherapy; ii) radiotherapy using an altered fractionation regimen; and iii) radiotherapy combined with surgery.

An extensive literature search failed to identify the proportion of patients with advanced disease who would undergo surgery and adjuvant radiotherapy or definitive radiotherapy. In Australia, the majority of patients are treated with

chemoradiotherapy or radiotherapy, reserving surgery for salvage, therefore the proportion of patients undergoing surgery is assumed to be very small and is unlikely to significantly impact on the average number of fractions per head and neck cancer patient. In this model, all patients with stage III-IV hypopharyngeal cancer were recommended to have definitive radiotherapy.

15. Cancer of the lip

The BC Cancer Agency guidelines (357) state that radiotherapy for early stage lip cancers usually consists of a 2 week course of treatment (10 fractions). On the other hand, the NCCN guidelines (351) recommend a dose of 50 to 66 Gy for early stage disease and 66 to 74 Gy for advanced disease.

No high level evidence exists regarding the optimal dose fractionation schedules for treatment of lip cancer. Veness et al (385) reported on a retrospective review of 93 lip cancer patients referred to Westmead Hospital, Australia. Forty-six patients (50%) were treated with radiotherapy alone and 16 patients (17%) had surgery and adjuvant radiotherapy. A wide range of doses was delivered, the median radiotherapy dose was 51 Gy given in 3 Gy daily fractions. In another retrospective review of 323 patients treated at Peter MacCallum Cancer Institute, Australia, again a wide range of doses was delivered (9 to 60 Gy in 1 to 25 fractions) (386). The median dose of radiotherapy delivered was 32 Gy in 6 fractions.

The shortest dose fractionation schedule recommended in the guidelines, 40 Gy in 10 fractions, was used in the model. A sensitivity analysis was performed to assess the impact of the range of number of fractions (10 to 37 fractions) on the average number of fractions per head and neck cancer patient.

16. Cancer of the salivary gland: post-operative radiotherapy

There are no randomised trials comparing surgery with surgery and adjuvant radiotherapy, but retrospective studies suggested that adjuvant radiotherapy improves local control in the presence of adverse pathological features (387-

390). If adjuvant therapy is to be administered, the NCCN guidelines (351) recommend a dose in the vicinity of 60 Gy in 1.8 to 2 Gy per fraction (30 to 33 fractions). The median dose of radiotherapy was 57 to 62 Gy in these studies. The Dutch Head and Neck Oncology Cooperative Group (387) reported on the largest study of 498 patients, of whom 386 were treated with surgery and adjuvant radiotherapy (median dose 62 Gy, range 18 to 74Gy). No dose-response relationship was shown. The authors recommended a dose of at least 60 Gy in the adjuvant setting. The dose fractionation schedule, 60 Gy in 30 fractions, was used in the model. A sensitivity analysis was performed to assess the impact of the range of number of fractions recommended in the guidelines (30 to 33 fractions) on the average number of fractions per head and neck cancer patient.

17. Cancer of the salivary gland: locoregional recurrence

The NCCN guidelines (351) recommend surgery and adjuvant radiotherapy for resectable locoregional recurrence, and radiotherapy +/- chemotherapy for unresectable locoregional recurrence. The guidelines recommend a post-operative radiotherapy dose in the vicinity of 60 Gy in 1.8 to 2 Gy per fraction (30 to 33 fractions) and a definitive radiotherapy dose in the vicinity of 70 Gy in 1.8 to 2 Gy per fraction (35 to 39 fractions).

In the study of 498 patients reported by Terhaard et al (387), 40 patients with unresectable or M1 disease were treated with primary radiotherapy alone. There was a clear dose-response relationship with a 50% 5-year local control rate in patients who received ≥ 66 Gy versus 0% in those who received < 66 Gy. The authors recommended a dose of 70 Gy for unresectable salivary gland cancer.

An extensive literature search failed to identify the proportion of patients with locoregional recurrence after surgery alone who undergo salvage surgery and post-operative radiotherapy or definitive radiotherapy. In the model, the shortest dose fractionation schedule recommended in the guidelines, 60 Gy in 30 fractions, was used for these patients. A sensitivity analysis was performed to

assess the impact of the range of number of fractions (30 to 39 fractions) on the average number of fractions per head and neck cancer patient.

18. Cancer of the paranasal sinus: proportion of patients having surgery and radiotherapy dose

For resectable tumours, the NCCN guidelines (351) recommend complete surgical resection followed by adjuvant radiotherapy. For unresectable tumours, definitive radiotherapy +/- chemotherapy is recommended. The guidelines recommend a dose of 60 to 66 Gy in 30 to 33 fractions post-operatively. In the definitive setting, the guidelines recommend a dose of 66 to 74 Gy in 33 to 37 fractions (5 fractions per week), 66 to 74 Gy in 33 to 37 fractions (6 fractions per week), 72 Gy in 42 fractions (accelerated radiotherapy) and 81.6 Gy in 68 fractions (hyperfractionation).

Dulguerov et al (365) reported on 220 patients treated at the University of California- Los Angeles and the University Hospital of Geneva, Switzerland. Of these patients, 156 (71%) had surgery. Smaller single-institutional studies have reported an operative rate of 60-79% (391-394).

In this model, data from Dulguerov et al (365) were used to divide patients with paranasal sinus cancer into two branches: those who have surgery (0.71) and those who have no surgery (0.29), as this was the largest study identified. The shortest dose fractionation schedule, 60 Gy in 30 fractions, was used for patients undergoing surgery and adjuvant radiotherapy. A sensitivity analysis was performed to assess the impact of the range of number of fractions (30 to 33 fractions) on the average number of fractions per head and neck cancer patient. The shortest dose fractionation schedule, 66 Gy in 33 fractions, was used for patients undergoing definitive radiotherapy. A sensitivity analysis was performed to assess the impact of the range of number of fractions (33 to 68 fractions) on the average number of fractions per head and neck cancer patient.

19. Cancer of the nasopharynx: stage data and radiotherapy dose

The NCCN guidelines (351) recommend definitive radiotherapy alone for stage I disease and recommend a dose of 66 to 70 Gy in 33 to 35 fractions. The majority of patients received this dose range in published retrospective studies of early stage nasopharyngeal cancer (395-396). For more advanced disease, the guidelines recommend chemoradiotherapy to a dose of 70 Gy in 35 fractions. Randomised controlled studies have shown improved survival with chemoradiotherapy in patients with advanced disease (397-398).

The SEER database (172) showed that between 1988 and 2001, of the 2504 patients with nasopharyngeal carcinoma with available stage data, 424 (17%) had stage I disease. This proportion was used to divide patients with nasopharyngeal carcinoma into two branches in the model: stage I disease (0.17) and stage II-IV disease (0.83).

In the model, the shortest dose fractionation schedule recommended in the guidelines, 66 Gy in 33 fractions, was used for patients with stage I disease. A sensitivity analysis was used to assess the impact of the range of number of fractions (33 to 35 fractions) on the average number of fractions per head and neck cancer patient. For stage II-IV disease, the dose fractionation schedule, 70 Gy in 35 fractions, was used.

20. Cancer of unknown primary

The NCCN guidelines (351) recommend a dose of 66 to 74 Gy in 33 to 37 fractions. No high level evidence exists regarding the optimal radiotherapy dose in this setting. The median dose was 60 to 70 Gy in several retrospective studies (399-402).

The dose fractionation schedule, 66 Gy in 33 fractions, was used in the model. A sensitivity analysis was performed to assess the impact of the range of number of fractions (33 to 37 fractions) on the average number of fractions per head and neck cancer patient.

Sensitivity Analysis

The optimal number of fractions per head and neck cancer patient was 22.8.

As discussed by Delaney et al (1, 366), there were several data elements where there was uncertainty. These included the proportion of patients with stage I-II oral cavity cancer undergoing surgery (0.0 to 0.9), the proportion of patients with operable lip cancer (0.75 to 0.94), the proportion of patients with supraglottic larynx cancer suitable for conservation surgery (0.0 to 0.16), the proportion of patients with early glottic cancer where treatment other than radiotherapy is an alternative (0.0 to 0.1), and the proportion of patients with head and neck unknown primary with nodal disease not warranting routine radiotherapy (0.09 to 0.22).

There was also a range of number of fractions considered appropriate for:

- adjuvant radiotherapy for oral cavity cancer (30 to 33 fractions)
- definitive radiotherapy for recurrent oral cavity cancer (33 to 68 fractions)
- definitive radiotherapy for stage I-II oral cavity cancer (33 to 37 fractions)
- chemoradiotherapy for oral cavity cancer (33 to 35 fractions)
- definitive radiotherapy for stage III-IV oral cavity cancer and ECOG 2-3 (33 to 68 fractions)
- radiotherapy for lip cancer (10 to 37 fractions)
- radiotherapy for recurrent supraglottic cancer (30 to 33 fractions)
- definitive radiotherapy for stage I-II supraglottic cancer (33 to 37 fractions)
- chemoradiotherapy for supraglottic cancer (33 to 35 fractions)
- definitive radiotherapy for stage III-IV supraglottic cancer and ECOG 2-3 (33 to 68 fractions)
- adjuvant radiotherapy for supraglottic cancer (30 to 33 fractions)
- definitive radiotherapy for stage I-II glottic cancer (16 to 35 fractions)
- chemoradiotherapy for glottic cancer (33 to 35 fractions)
- definitive radiotherapy for stage III-IV glottic cancer and ECOG 2-3 (42 to 68 fractions)
- adjuvant radiotherapy for glottic cancer (30 to 33 fractions)
- definitive radiotherapy for stage I-II oropharyngeal cancer (33 to 37 fractions)

- chemoradiotherapy for oropharngeal cancer (33 to 35 fractions)
- definitive radiotherapy for stage III-IV oropharyngeal cancer and ECOG 2-3 (33 to 68 fractions)
- adjuvant radiotherapy for salivary gland cancer (30 to 33 fractions)
- radiotherapy for recurrent salivary gland cancer (30 to 39 fractions)
- definitive radiotherapy for stage I-II hypopharyngeal cancer (33 to 37 fractions)
- chemoradiotherapy for hypopharyngeal cancer (33 to 35 fractions)
- definitive radiotherapy for stage III-IV hypopharyngeal cancer and ECOG 2-3 (33 to 68 fractions)
- adjuvant radiotherapy for paranasal sinus cancer (30 to 33 fractions)
- definitive radiotherapy for paranasal sinus cancer (33 to 68 fractions)
- definitive radiotherapy for stage I nasopharyngeal cancer (33 to 35 fractions)
- radiotherapy for cancer of unknown primary (33 to 37 fractions)

To assess the impact of these uncertainties on the average number of radiotherapy fractions per head and neck cancer patient, a one-way sensitivity analysis was performed for each of these variables. The impact of these variables on the average number of radiotherapy fractions is illustrated by a tornado diagram (Fig. 1). The average number of radiotherapy fractions per head and neck cancer patient varied between 22 and 25.6. This range was largely contributed by the uncertainty regarding the proportion of patients with stage I-II oral cavity cancer undergoing surgery. The average number of radiotherapy fractions varied between 22.8 and 25.6 due to this single variable. The optimal fractionation tree for head and neck cancer is shown in Figs. 2-6.

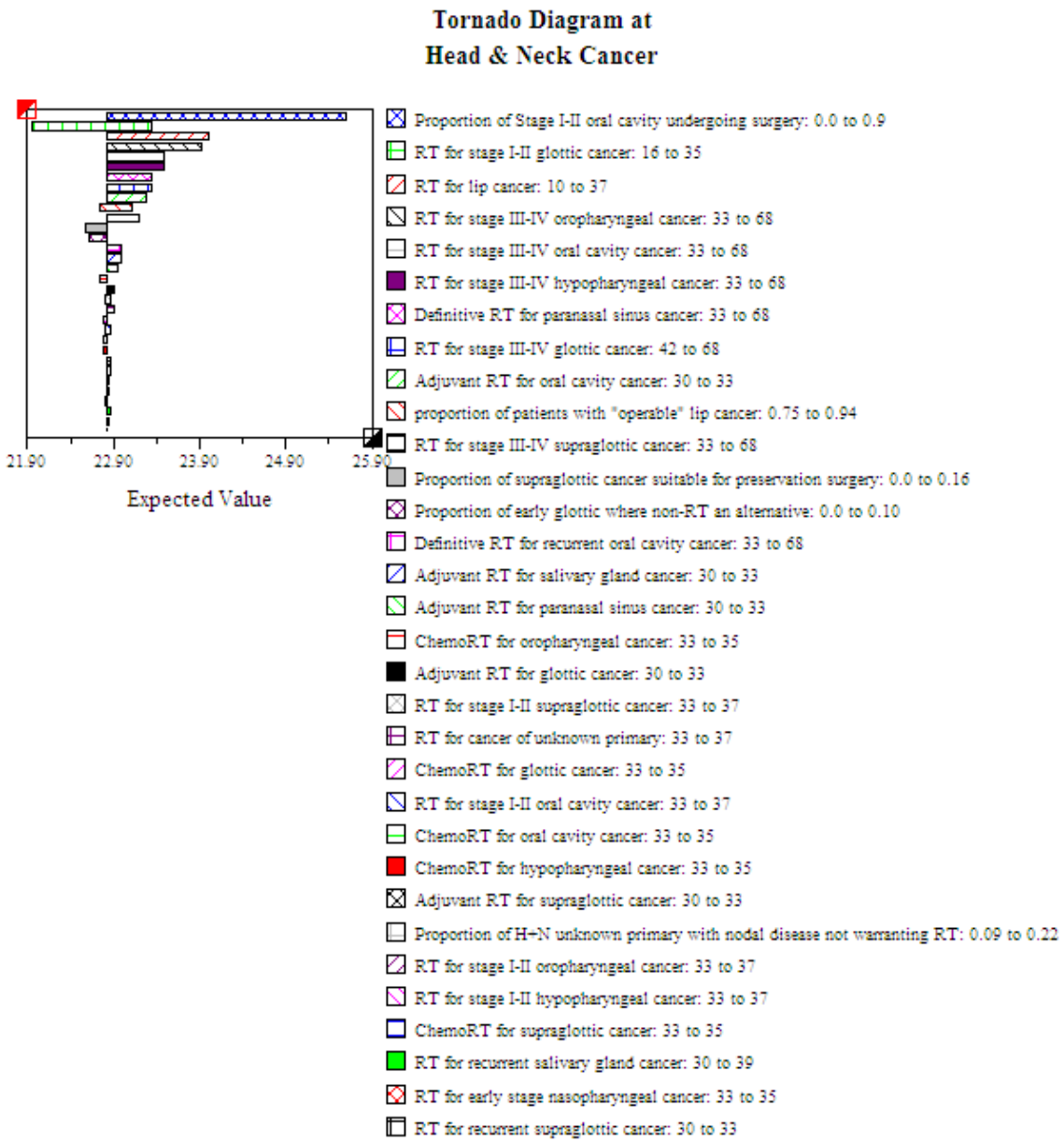

Figure 1. Head and neck cancer. Sensitivity analysis

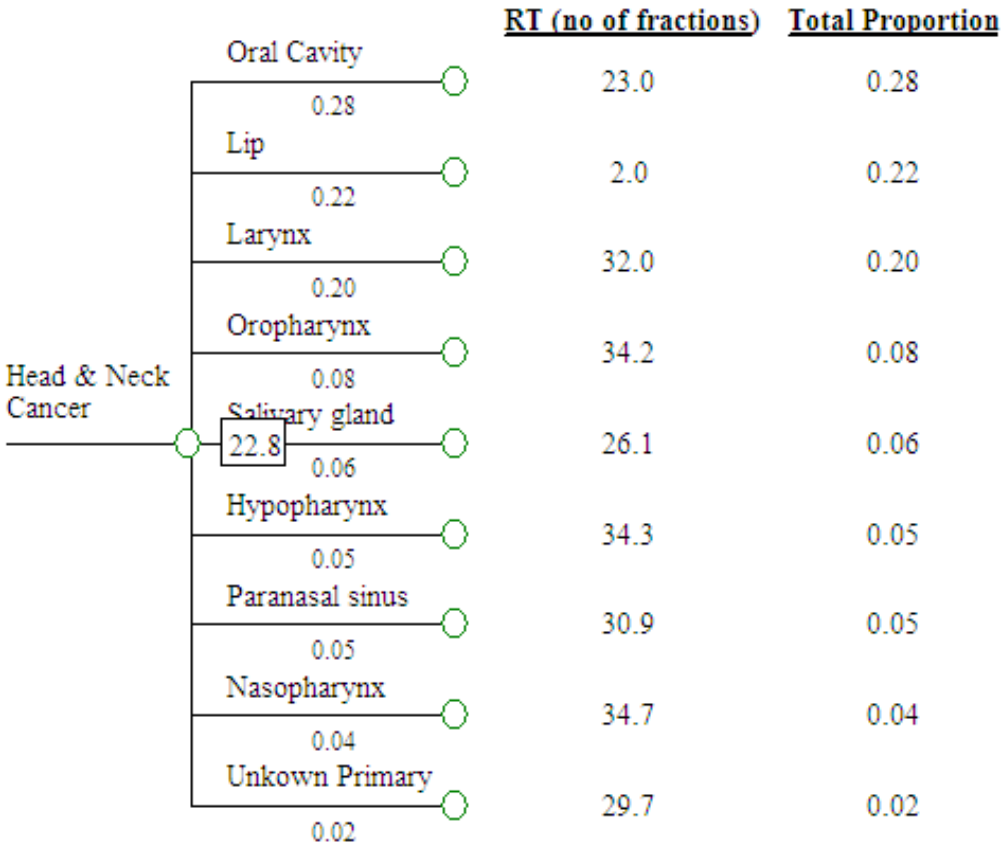

Figure 2. Head and neck cancer. Optimal fractionation tree

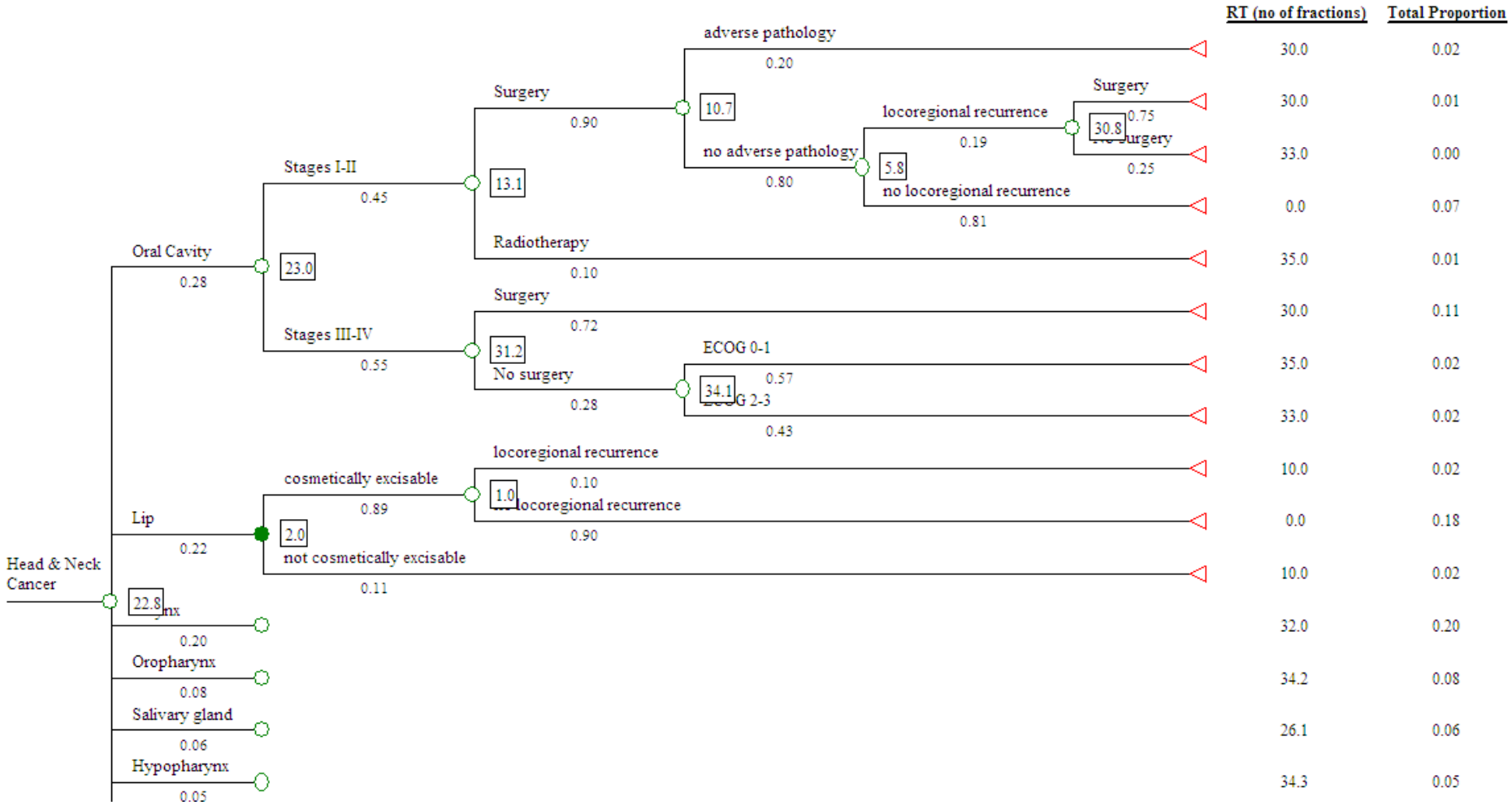

Figure 3. Head and neck cancer: cancer of the oral cavity and lip. Optimal fractionation tree

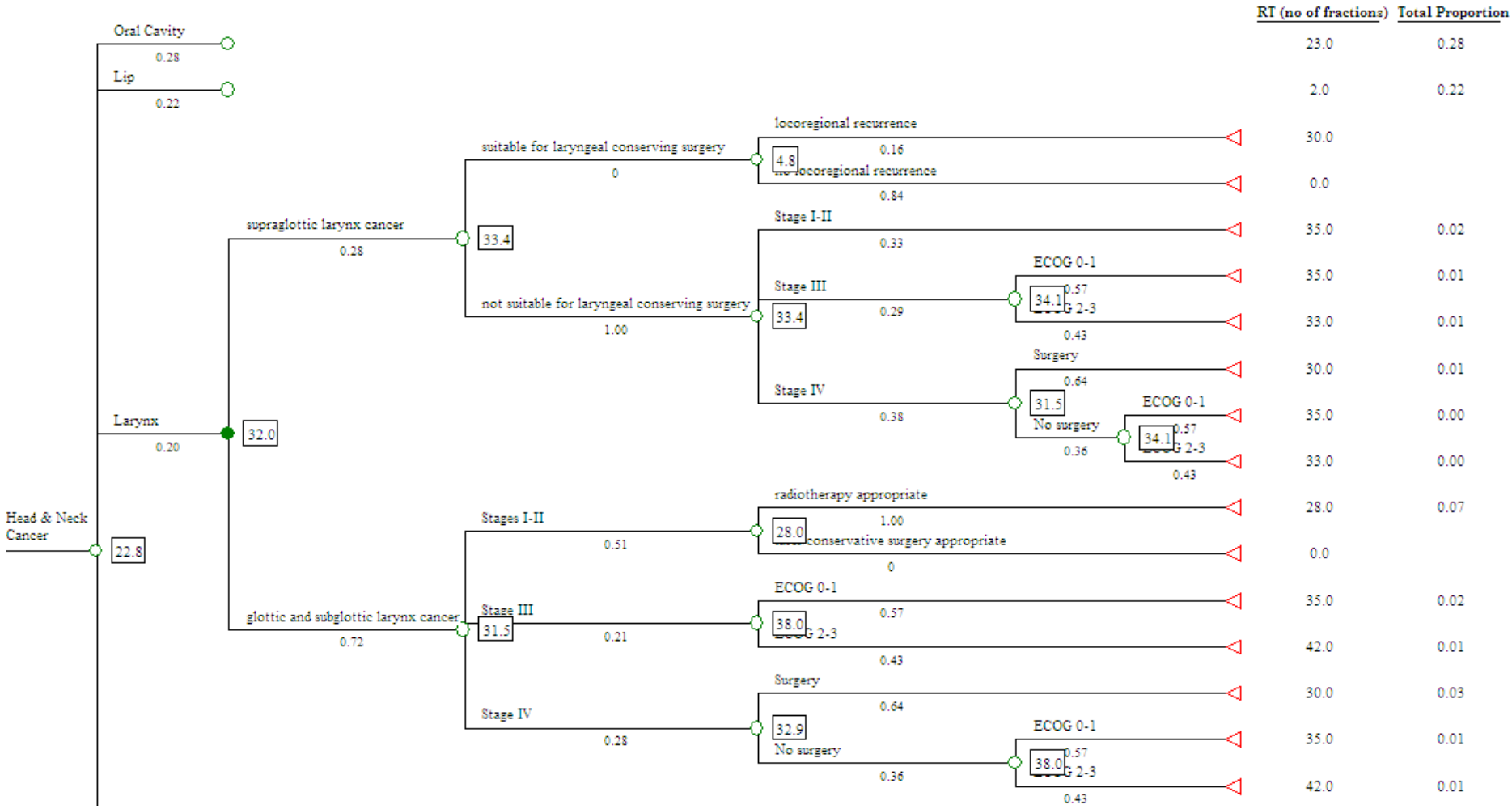

Figure 4. Head and neck cancer: cancer of the larynx. Optimal fractionation tree

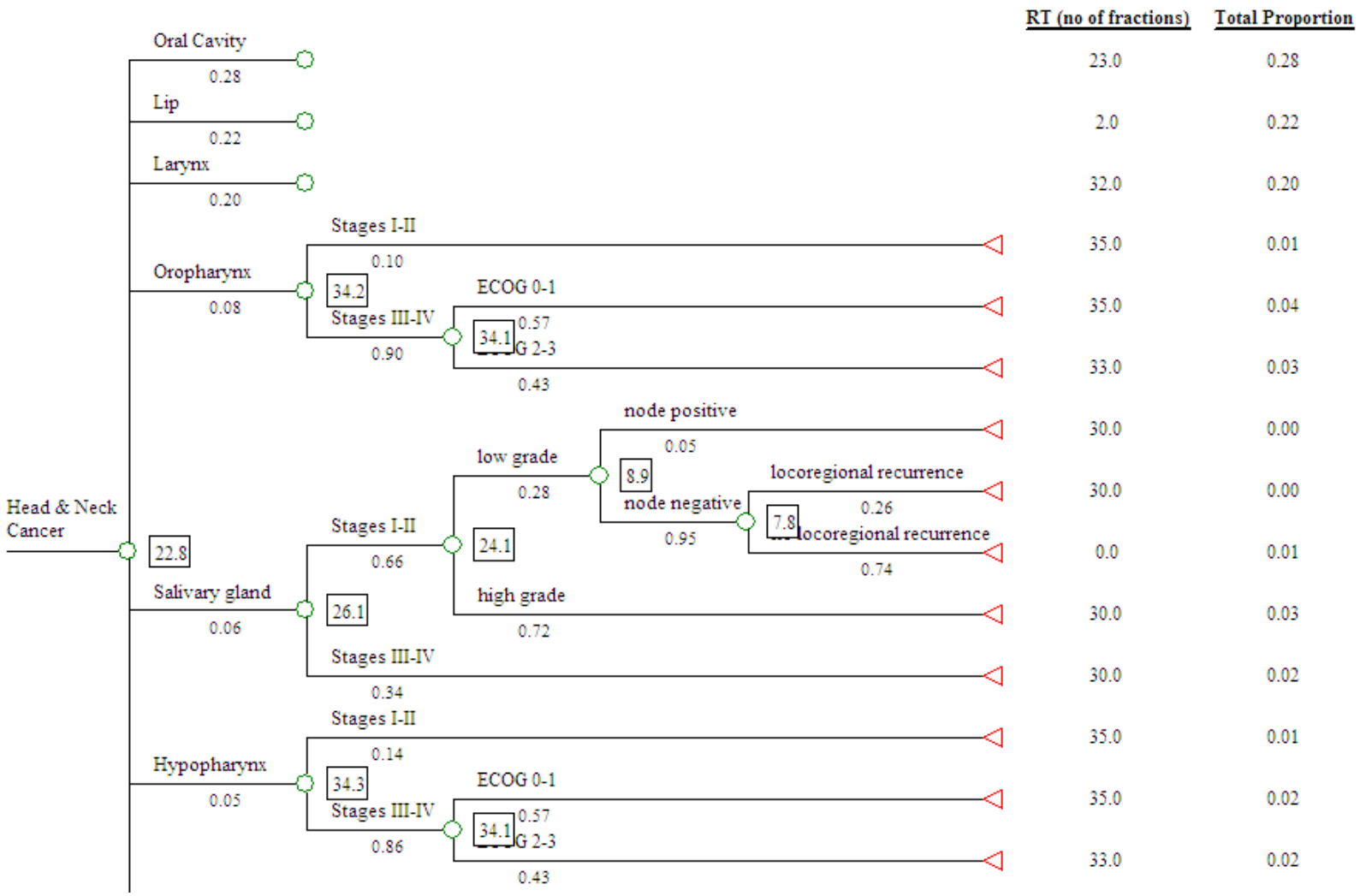

Figure 5. Head and neck cancer: cancer of the oropharynx, salivary gland and hypopharynx. Optimal fractionation tree

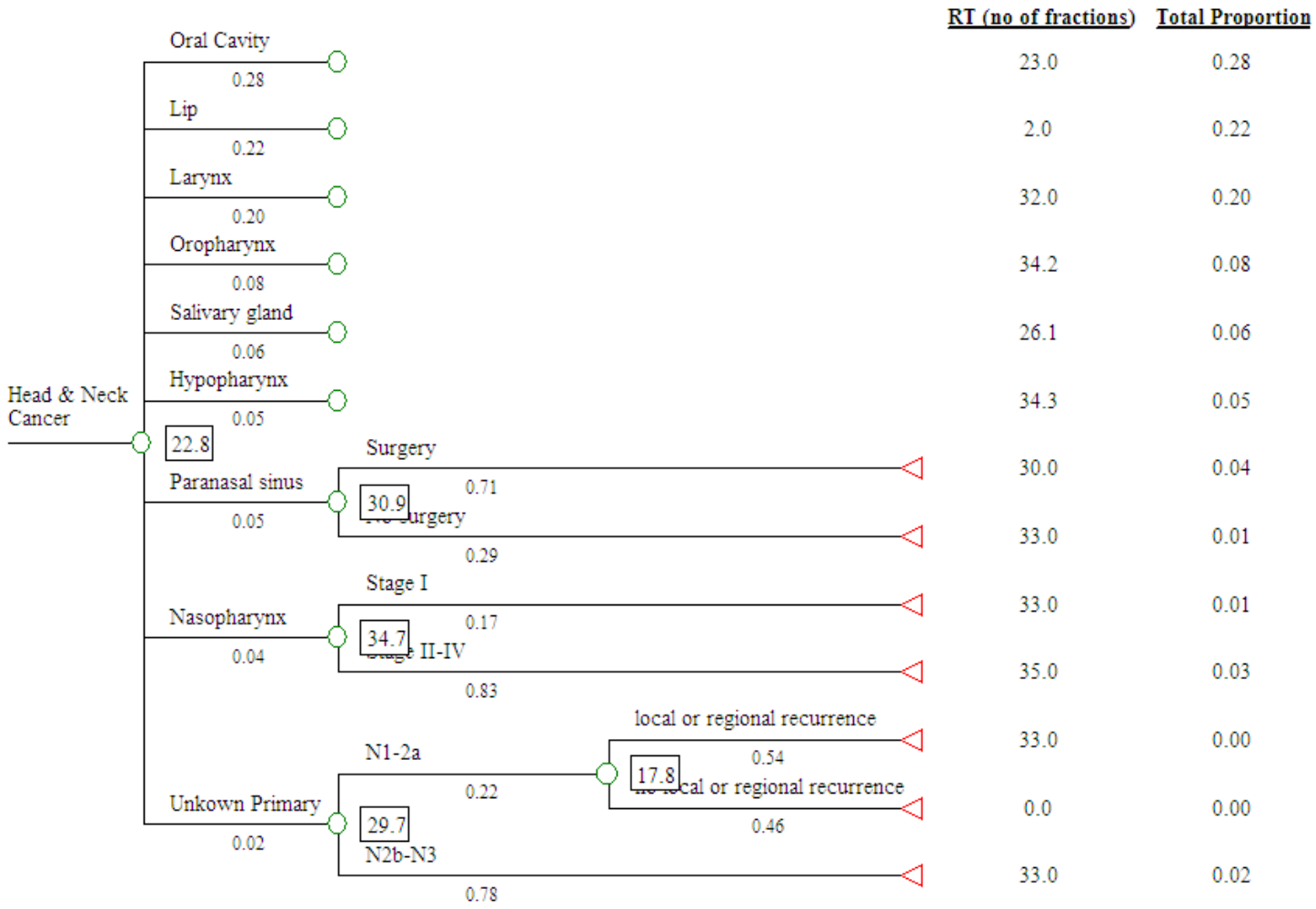

Figure 6. Head and neck cancer: cancer of the paranasal sinus, nasopharynx and unknown primary. Optimal fractionation tree

Chapter 12 Leukaemia

Table 1. Leukaemia. Number of fractions of radiotherapy – Sources of evidence

Outcome no (utilisation model)	Clinical scenario (utilisation model)	Outcome no (fractionation model)	Clinical scenario (addition to fractionation model)	No of fractions	Range of no of fractions	Level of evidence	References	Notes	Proportion of all leukaemia patients
1	ALL, age < 15 years, CNS disease at presentation	1	−	12	–	II	NCI guidelines (403)	2	<0.01
2	ALL, age < 15 years, no CNS disease at presentation, high risk	2	−	8	−	II	NCI guidelines (403)	3	0.01
3	ALL, age < 15 years, no CNS disease at presentation, not high risk, relapse, CNS/testicular	3	CNS relapse	12	12−16	III	Barredo et al (404)	5	<0.01
		4	Testicular relapse	13	−	II	Wofford et al (405)	6	<0.01
4	ALL, age < 15 years, no CNS disease at presentation, not high risk, relapse,	5	−	6	−	II	Davies et al (406) Bunin et al (407)	7	<0.01

Outcome no (utilisation model)	Clinical scenario (utilisation model)	Outcome no (fractionation model)	Clinical scenario (addition to fractionation model)	No of fractions	Range of no of fractions	Level of evidence	References	Notes	Proportion of all leukaemia patients
	bone marrow, within 3 years, HLA compatible donor								
8	ALL, age > 15 years, but <60 years, relapse, HLA compatible donor	9	−	6	−	II	Ribera et al (408) Cornelissen et al (409) Attal et al (410) Sebban et al (411) Hunault et al (412)	8	<0.01
15	AML, age 16-54 years, low risk, complete remission to induction chemotherapy, relapse, HLA compatible donor, proceed to transplant	16	−	6	–	II	Clift et al (413) Clift et al (414)	9	0.01
20	AML, age 16-54 years,	21	−	6	−	II	Clift et al (413) Clift et al (414)	9	0.02

Outcome no (utilisation model)	Clinical scenario (utilisation model)	Outcome no (fractionation model)	Clinical scenario (addition to fractionation model)	No of fractions	Range of no of fractions	Level of evidence	References	Notes	Proportion of all leukaemia patients
	high/intermediate risk, HLA compatible donor, proceed to BMT								

Proportion of all leukaemia patients in whom radiotherapy is recommended	**0.04 (4%)**
Proportion of all cancer patients = 0.04 x 0.03 =	**0.0012 (0.12%)**
Average number of fractions per leukaemia patient	**0.3**
Average number of fractions per treatment course = 0.3/0.04 =	**7.5**

Key to abbreviations in leukaemia decision tree and tables

ALL – Acute lymphoblastic leukaemia

CNS – Central nervous system

NCI – National Cancer Institute

AML – Acute myeloid leukaemia

HLA – Human leukocyte antigen

BMT – Bone marrow transplant

Table 2. Leukaemia. The incidence of attributes used to define number of radiotherapy fractions

Key	Population or subpopulation of interest	Attribute	Proportion of populations with this attribute	Quality of Information	References	Notes
A	All registry cancers	Leukaemia	0.03	α	AIHW (16)	1
B	ALL, age < 15 years, no CNS disease at presentation, not high risk, relapse, CNS/testicular relapse	CNS relapse	0.57 0.88 0.71 0.78	θ θ θ θ	Reiter et al (415) Schrappe et al (416) Rivera et al (417) Kamps et al (418)	4

Leukaemia

The optimal radiotherapy fractionation model for leukaemia was based on the optimal radiotherapy utilisation model for leukaemia (1, 419).

Treatment Guidelines

The following clinical practice guidelines for the management of leukaemia were identified:

- NCCN clinical practice guidelines on acute myeloid leukaemia (version 2.2011) (420)
- NCCN clinical practice guidelines on chronic myelogenous leukaemia (version 2.2011) (421)
- NCI PDQ guidelines on childhood acute lymphoblastic leukaemia (2010) (403)
- NCI PDQ guidelines on childhood acute myeloid leukaemia and other myeloid malignancies (2010) (422)
- NCI PDQ guidelines on adult acute lymphoblastic leukaemia (2010) (423)
- NCI PDQ guidelines on adult acute myeloid leukaemia (2010) (424)
- NCI PDQ guidelines on chronic lymphocytic leukaemia (2010) (425)
- NCI PDQ guidelines on chronic myelogenous leukaemia (2010) (426)

Explanatory Notes for Tables 1 and 2

1. Incidence of leukaemia

Leukaemia constituted 2.6% of all cancers occurring in Australia in 2005 (16).

2. Acute lymphoblastic leukaemia (ALL), age < 15 years, CNS disease at presentation: radiotherapy dose

The NCI guidelines on childhood ALL (403) recommend intrathecal chemotherapy and cranial irradiation for patients with clinically evident CNS disease at diagnosis, and state that the usual dose of radiotherapy is 18 Gy. The dose fractionation schedule, 18 Gy in 12 fractions, was used in the model.

3. ALL, age < 15 years, no CNS disease at presentation, high risk: radiotherapy dose

The NCI guidelines on childhood ALL (403) state that the dose of cranial irradiation administered has decreased over the last two decades, making reference to the ALL-BFM 90 study which demonstrated that a reduced dose of prophylactic radiation of 12 Gy instead of 18 Gy provided effective CNS prophylaxis in high risk patients (416). The dose fractionation schedule, 12 Gy in 8 fractions, was used in the model.

4. ALL, age < 15 years, CNS/testicular relapse: proportion of patients with CNS and testicular relapse respectively

Large multicentre studies have shown that of low risk patients with CNS or testicular relapse, 57-88% had CNS relapse (415-418). Data from the study with the largest number of patients reported by Reiter et al (415) were used to divide the branch of patients with CNS/testicular relapse into two branches: those with CNS relapse (0.57) and those with testicular relapse (0.43).

5. ALL, age < 15 years, CNS relapse: radiotherapy dose

The NCI guidelines on childhood ALL (403) state that while the prognosis for children with isolated CNS relapse had been quite poor in the past, aggressive systemic and intrathecal therapy combined with craniospinal radiation has improved the outlook particularly for patients who did not receive cranial radiation during their first remission. The guidelines make reference to the Pediatric Oncology Group study which showed that children who had not previously received radiation therapy and with initial remission of 18 months or more, who were treated with intensive systemic and intrathecal chemotherapy

followed by 18 Gy in 12 fractions of cranial irradiation at relapse, had a 4-year event-free survival of 78%. Children with an initial remission of less than 18 months received the same chemotherapy but had craniospinal radiation (24 Gy in 16 fractions to the cranium and 15 Gy in 10 fractions to the spine) and achieved a 4-year event-free survival of 52% (404).

The shorter dose fractionation schedule, 18 Gy in 12 fractions, was used for patients with CNS relapse in the model. A sensitivity analysis was performed to assess the impact of the range of number of fractions (12 to 16 fractions) on the average number of fractions per leukaemia patient.

6. ALL, age < 15 years, testicular relapse: radiotherapy dose

The NCI guidelines on childhood ALL (403) state that the standard approach for treating isolated testicular relapse is to administer chemotherapy plus radiation therapy, and that the results of treatment depend on the timing of the relapse, making reference to the Pediatric Oncology Group study reported by Wofford et al (405). In this study, 80 patients were randomised to different chemotherapy regimens, all patients were treated with bilateral testicular irradiation of 26 Gy in 13 fractions. Fifty-five patients had isolated microscopic testicular leukaemia detected by an elective biopsy at completion of initial treatment, and 25 patients had late (≥ 6 months off-therapy) overt testicular relapse. The 4-year event-free survival was 53% in patients with occult testicular relapse, and 84% in those with late overt testicular relapse. The dose fractionation schedule, 26 Gy in 13 fractions, was used in the model for patients with testicular relapse.

7. ALL, age < 15 years, bone marrow relapse: radiotherapy dose

The NCI guidelines on childhood ALL (403) state that two retrospective studies (406, 427) and a randomised trial (407) suggest that transplant conditioning regimens that include total body irradiation (TBI) produce higher cure rates than chemotherapy-only preparative regimens. No specific dose fractionation schedules are recommended in the guidelines.

Davies et al (406) compared outcomes of 627 children who underwent bone marrow transplant for ALL, 451 received cyclophosphamide plus TBI and 176 received busulfan plus cyclophosphamide for pretransplant conditioning. The 3-year probabilities of survival and leukaemia-free survival were superior in patients who received TBI. Treatment-related mortality was also lower in this group. A total of 82% of patients received a fractionated course of TBI (56% ≤ 12 Gy, 26% > 12 Gy), 18% of patients received non-fractionated TBI (16% ≤ 10 Gy, 2% > 10 Gy).

Bunin et al (407) conducted a randomised controlled study on 43 children with ALL undergoing bone marrow transplant. Patients were randomised to either busulfan or TBI regimens. The TBI dose in this study was 12 Gy in 6 fractions over 3 days. The 3-year event-free survival was higher in patients who were treated with TBI.

The dose fractionation schedule that patients received in the randomised controlled study reported by Bunin et al (407), 12 Gy in 6 fractions, was used in the model.

8. ALL, age 16-60 years, relapse: radiotherapy dose

The NCI guidelines on adult ALL (423) state that patients who experience a relapse following chemotherapy and maintenance therapy are unlikely to be cured by further chemotherapy alone, and should be considered for reinduction chemotherapy followed by allogeneic bone marrow transplantation. No specific dose fractionation schedules for TBI are recommended in the guidelines.

The dose fractionation schedule, 12 Gy in 6 fractions, was used in most randomised controlled studies of adult ALL patients who had TBI as a component of their treatment (408-412). This dose fractionation schedule was used in the model.

9. Acute myeloid leukaemia (AML), age 16-54 years, bone marrow transplant: radiotherapy dose

No specific dose fractionation schedules for TBI are recommended in the guidelines. Clift et al (413-414) reported on a randomised controlled study of 71 patients with AML undergoing allogeneic bone marrow transplantation while in first complete remission. All patients received cyclophosphamide followed by TBI. Patients were randomised to TBI of either 12 Gy in 6 fractions (2 Gy per fraction) or 15.75 Gy in 7 fractions (2.25 Gy per fraction). This study showed that the higher dose of TBI was associated with a lower rate of relapse, but did not improve survival because of increased mortality from causes other than relapse.

The dose fractionation schedule, 12 Gy in 6 fractions, was used in the model.

Sensitivity Analysis

The optimal number of fractions per leukaemia patient was 0.3.

As discussed by Delaney et al (1, 419), there was uncertainty regarding the data on the proportion of children with ALL with no CNS disease at presentation and no high risk features who relapse because of different proportions reported in the literature (0.12 to 0.37). A range of number of fractions was also considered appropriate for radiotherapy for CNS relapse in children with ALL (12 to 16 fractions).

To assess the impact of these uncertainties on the average number of radiotherapy fractions per leukaemia patient, a one-way sensitivity analysis was performed for these variables. The impact of these variables on the average number of radiotherapy fractions is illustrated by a tornado diagram (Fig. 1). The average number of radiotherapy fractions per leukaemia patient did not vary significantly. The optimal fractionation tree for leukaemia is shown in Figs. 2-4.

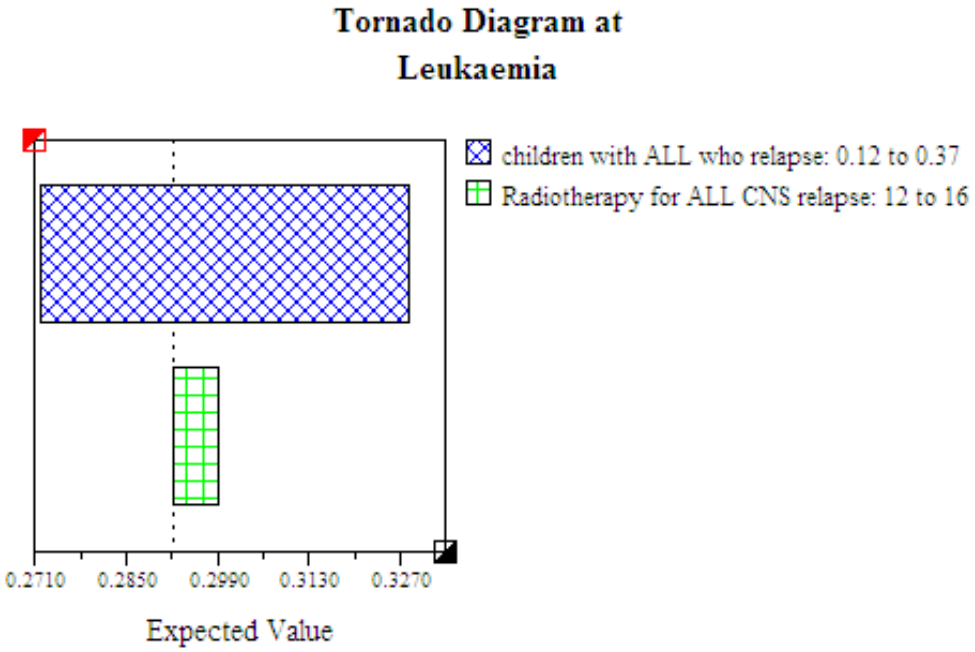

Figure 1. Leukaemia. Sensitivity analysis

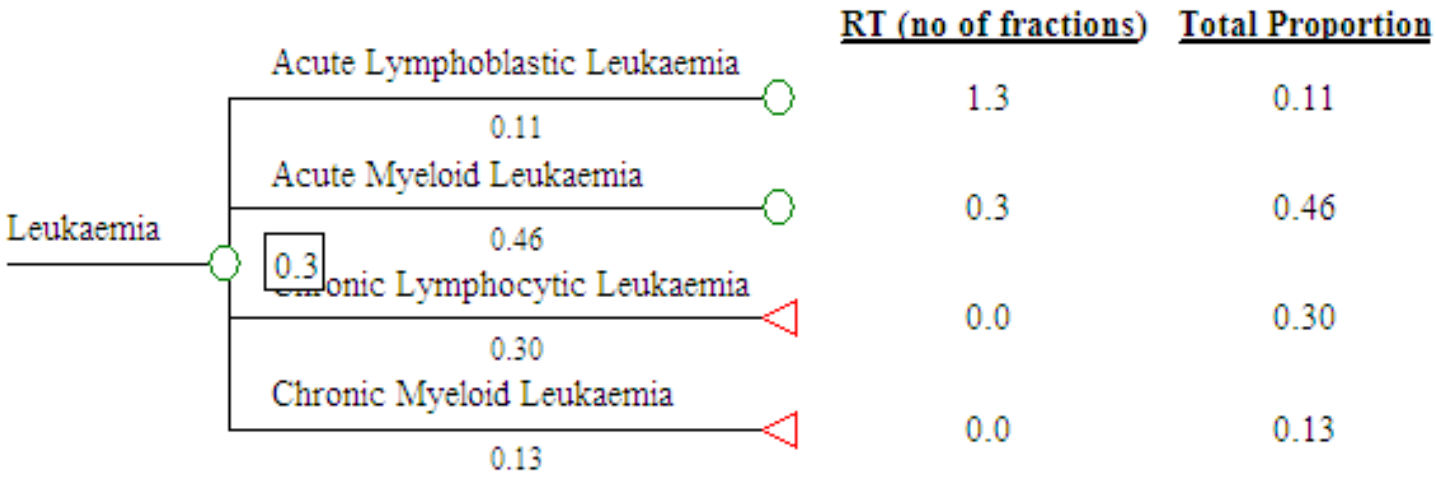

Figure 2. Leukaemia. Optimal fractionation tree

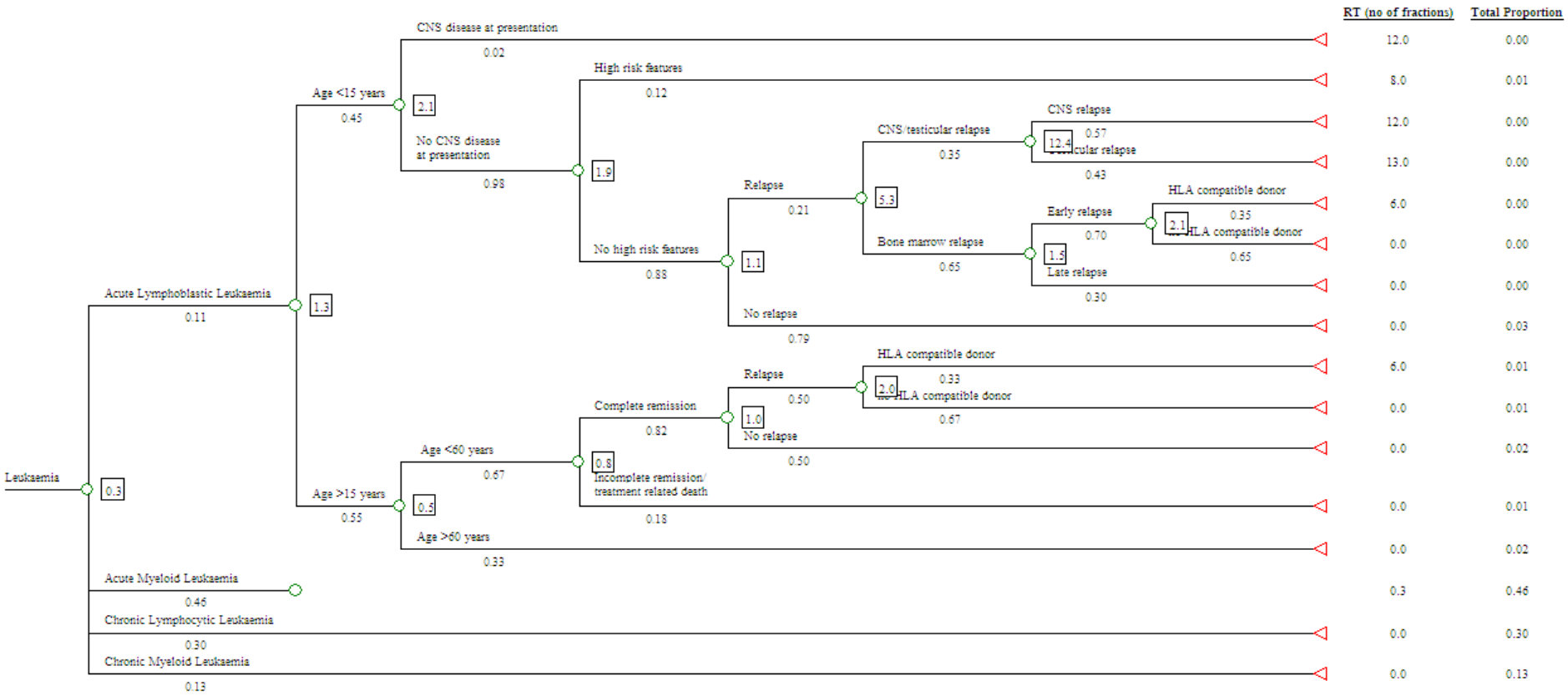

Figure 3. Leukaemia: ALL. Optimal fractionation tree

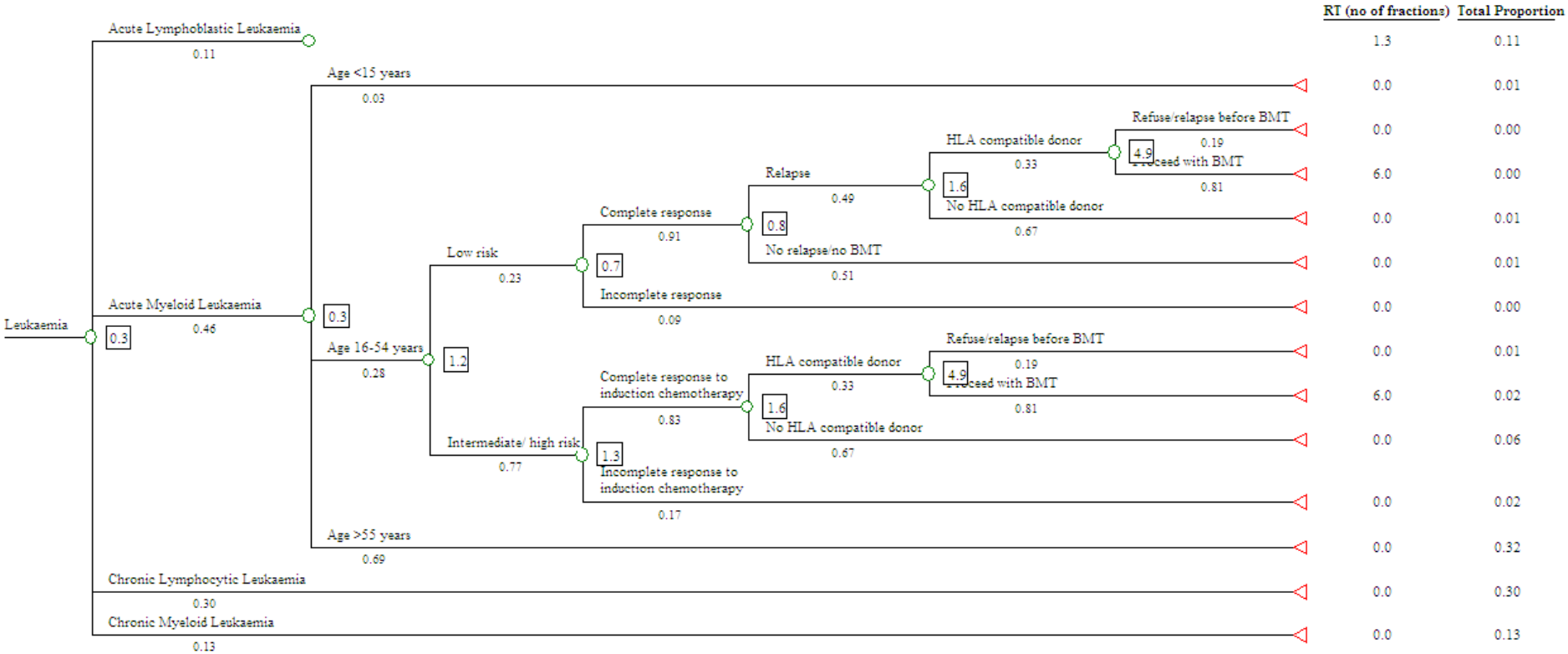

Figure 4. Leukaemia: AML, chronic lymphocytic leukaemia and chronic myelogenous leukaemia. Optimal fractionation tree

Chapter 13 Thyroid Cancer

Table 1. Thyroid Cancer. Number of fractions of radiotherapy – Sources of evidence

Outcome no (utilisation model)	Clinical scenario (utilisation model)	Outcome no (fractionation model)	Clinical scenario (addition to fractionation model)	No of fractions	Range of no of fractions	Level of evidence	References	Notes	Proportion of all thyroid cancer patients
1	Thyroid cancer, papillary, persistent local recurrence	−	−	25	25−33	III	British Thyroid Association guidelines (428)	2	0.02
3	Thyroid cancer, papillary, no local recurrence, distant recurrence, bone metastases that do not completely respond to radioactive iodine	−	−	1	1−5	I	RCR guidelines (18)	7	0.01
4	Thyroid cancer, papillary, no local recurrence, distant recurrence, brain	−	−	5	5−10	II	RCR guidelines (18)	6	<0.01

Outcome no (utilisation model)	Clinical scenario (utilisation model)	Outcome no (fractionation model)	Clinical scenario (addition to fractionation model)	No of fractions	Range of no of fractions	Level of evidence	References	Notes	Proportion of all thyroid cancer patients
	metastases								
7	Thyroid cancer, follicular, persistent local recurrence	−	−	25	25−33	III	British Thyroid Association guidelines (428)	2	<0.01
9	Thyroid cancer, follicular, no local recurrence, distant recurrence, bone metastases that do not respond to radioactive iodine	−	−	1	1−5	I	RCR guidelines (18)	7	0.01
10	Thyroid cancer, follicular, no local recurrence, distant recurrence, brain metastases	−	−	5	5−10	II	RCR guidelines (18)	6	<0.01

Outcome no (utilisation model)	Clinical scenario (utilisation model)	Outcome no (fractionation model)	Clinical scenario (addition to fractionation model)	No of fractions	Range of no of fractions	Level of evidence	References	Notes	Proportion of all thyroid cancer patients
13	Thyroid cancer, medullary, not locally advanced, locoregional recurrence	−	−	25	25−33	−	NCI guidelines (429)	4	0.02
14	Thyroid cancer, medullary, not locally advanced, no local recurrence, distant recurrence, bone metastases	−	−	1	1−5	I	RCR guidelines (18)	7	<0.01
15	Thyroid cancer, medullary, not locally advanced, no local recurrence, distant recurrence, brain metastases	−	−	5	5−10	II	RCR guidelines (18)	6	<0.01

Outcome no (utilisation model)	Clinical scenario (utilisation model)	Outcome no (fractionation model)	Clinical scenario (addition to fractionation model)	No of fractions	Range of no of fractions	Level of evidence	References	Notes	Proportion of all thyroid cancer patients
18	Thyroid cancer, medullary, locally advanced	–	–	25	–	IV	NCCN guidelines (430)	3	0.02
19	Thyroid cancer, anaplastic	19	Distant metastases	5	–	IV	Wang et al (431)	5	0.01
		20	No distant metastases	29	–	IV	Tennvall et al (432-433)	5	0.01

Proportion of all thyroid cancer patients in whom radiotherapy is recommended	**0.10 (10%)**
Proportion of all cancer patients = 0.10 X 0.02 =	**0.002 (0.2%)**
Average number of fractions per thyroid cancer patient	**2**
Average number of fractions per treatment course = 2/0.10 =	**20**

Key to abbreviations in thyroid cancer decision tree and tables

RCR – Royal College of Radiologists

NCI – National Cancer Institute

NCCN – National Comprehensive Cancer Network

Table 2. Thyroid Cancer. The incidence of attributes used to define number of radiotherapy fractions

Key	Population or subpopulation of interest	Attribute	Proportion of populations with this attribute	Quality of Information	References	Notes
A	All registry cancers	Thyroid cancer	0.02	α	AIHW (16)	1
B	Thyroid cancer, anaplastic	Distant metastases	0.49	γ	Kebebew et al (434)	5

Thyroid Cancer

The optimal radiotherapy fractionation model for thyroid cancer was based on the optimal radiotherapy utilisation model for thyroid cancer (1, 349).

Treatment Guidelines

The following clinical practice guidelines for the management of thyroid cancer were identified:

- NCCN clinical practice guidelines on thyroid cancer (version 1.2011) (430)
- NCI guidelines on thyroid cancer (2010) (429)
- American Association of Clinical Endocrinologists and American Association of Endocrine Surgeons guidelines on management of thyroid carcinoma (2001) (435)
- BC Cancer Agency management guidelines on head and neck cancer (thyroid malignancies) (2004) (436)
- British Thyroid Association guidelines for the management of thyroid cancer (second edition) (2007) (428)
- Northern Cancer Network guidelines for management of thyroid cancer (2000) (437)

Explanatory Notes for Tables 1 and 2

1. Incidence of thyroid cancer

Thyroid cancer constituted 1.6% of all cancers occurring in Australia in 2005 (16).

2. Papillary and follicular thyroid carcinoma, persistent local recurrence: radiotherapy dose

The British Thyroid Association guidelines on the management of thyroid cancer (428) state that recurrent neck disease uncontrolled by surgery and radioactive iodine therapy is best treated by high dose palliative external beam radiotherapy, and as patients are likely to survive for a significant period, doses in the range of 50 to 66 Gy are often necessary. The guidelines make reference to the study reported by Meadows et al (438). In this study of patients with locally advanced or recurrent differentiated thyroid cancer, the median total dose was 64.9 Gy in 1.8 to 2 Gy per fraction. The authors commented that there was a paucity of dose-response data for differentiated thyroid cancer (439-442), but in their series, there were no locoregional recurrences in patients treated at their institution to doses in excess of 64 Gy, suggesting that there might be a dose-response relationship.

The shortest dose fractionation schedule recommended in the guidelines, 50 Gy in 25 fractions, was used. A sensitivity analysis was performed to assess the impact of the range of number of fractions (25 to 33 fractions) on the average number of fractions per thyroid cancer patient.

3. Locally advanced medullary thyroid carcinoma: radiotherapy dose

The NCCN guidelines on thyroid carcinoma (430) state that external beam radiotherapy has not been adequately studied as adjuvant therapy in medullary carcinoma. The guidelines state that when external beam radiotherapy is used, 40 Gy is typically administered in 20 fractions to the cervical, supraclavicular and upper mediastinal lymph nodes over 4 weeks, with a boost of 10 Gy in 5 fractions to the thyroid bed (total dose of 50 Gy in 25 fractions).

In this model, the dose fractionation schedule, 50Gy in 25 fractions, was used.

4. Locoregional recurrence of medullary thyroid carcinoma: radiotherapy dose

The NCI guidelines (429) recommend radiotherapy in patients with recurrent medullary thyroid carcinoma. No specific dose fractionation schedules are

recommended in the guidelines. There is also a paucity of data on the use of external beam radiotherapy for locoregional recurrence of medullary thyroid carcinoma.

Terezakis et al (443) reviewed the outcomes of 76 patients with advanced or recurrent non-anaplastic thyroid cancer treated between 1989 and 2006 at the Department of Radiation Oncology, Memorial Sloan-Kettering Cancer Centre. About half (49%) of these patients had recurrent disease. Of all patients, 12 (16%) had medullary carcinoma. The median dose for those with recurrent disease was 63 Gy (range 59.4 Gy to 70 Gy).

The same dose fractionation schedule as recommended in the guidelines for locally recurrent papillary and follicular carcinoma, 50 Gy in 25 fractions, was used. A sensitivity analysis was performed to assess the impact of the range of number of fractions (25 to 33 fractions) on the average number of fractions per thyroid cancer patient (see note 2).

5. Anaplastic thyroid cancer: radiotherapy dose

The NCCN guidelines (430) state that anaplastic thyroid cancer is almost uniformly fatal and no effective therapy exists, and recommend consideration of hyperfractionated radiotherapy with or without chemotherapy. Tennvall et al (432-433) reported on 55 patients with anaplastic thyroid cancer treated with hyperfractionated radiotherapy, doxorubicin and, when feasible, surgery, at the Departments of Oncology in Lund and in Stockholm, Sweden, between 1984 and 1999. Patients were treated with twice daily radiotherapy to a total dose of 46 Gy. Patients were treated according to three sequential protocols: 1 Gy per fraction twice daily (protocol A, 1984-1988), 1.3 Gy per fraction twice daily (protocol B, 1989-1992), and 1.6 Gy per fraction twice daily (protocol C, 1993-1999). Of the 40 patients who underwent surgery, 33 patients (83%) did not have a local recurrence. None of the 17 patients treated on protocol C (46 Gy in 29 fractions) had a local tumour remnant or local recurrence when surgery was feasible.

However, a significant proportion of patients with anaplastic thyroid cancer have distant metastases or poor performance status at diagnosis. These patients are not fit for a course of hyperfractionated radiotherapy and are often treated with a course of palliative radiotherapy. Wang et al (431) conducted a retrospective review of 47 patients with anaplastic thyroid cancer who underwent external beam radiotherapy from 1983 to 2004 at Princess Margaret Hospital, Canada. Patients with good performance status and without distant metastases were treated with radical radiotherapy. Palliative radiotherapy was delivered to patients with either poor performance status or distant metastases. Twenty-three patients (49%) underwent radical radiotherapy with a dose of > 40 Gy, and 24 patients (51%) underwent palliative radiotherapy with a dose of ≤ 40Gy.

A range of dose fractionation schedules were used in this study for patients treated with palliative radiotherapy. The median and most frequently prescribed dose was 20 Gy in 5 fractions. For patients treated with palliative radiotherapy, the median survival was 3.2 months. No patient survived more than 9 months. The local progression-free rate at 6 months was 64.6%. The authors commented that although it might be attractive to treat all patients with twice-daily radiotherapy to try to maximise local control in the neck, they did not think it was warranted to subject patients to a month or more of twice-daily radiation who had poor performance status or metastatic disease and a life expectancy of only 3 months. They would reserve aggressive radiotherapy treatment for patients with good performance status and without distant metastases.

Kebebew et al (434) reported on the treatment outcomes and prognostic factors of 516 patients with anaplastic thyroid cancer reported to the SEER database from 1973 to 2000. Of the 455 patients with available staging data, 222 (49%) had distant metastases.

In this model, patients with anaplastic thyroid cancer were divided into two branches: those with distant metastases (0.49) and treated with palliative radiotherapy, and those with locoregional disease (0.51) and treated with radical radiotherapy. Despite an extensive literature search, performance status data were not available. For patients treated with radical radiotherapy, the dose

fractionation schedule, 46 Gy in 29 fractions (1.6 Gy per fraction twice daily), was used. The dose fractionation schedule, 20 Gy in 5 fractions, was used in patients with metastatic anaplastic thyroid cancer.

6. Palliative radiotherapy for brain metastases: radiotherapy dose

The dose fractionation schedule, 20 Gy in 5 fractions, was used in this model. A sensitivity analysis was performed to assess the impact of the range of number of fractions (5 to 10 fractions) on the average number of fractions per thyroid cancer patient (see chapter 18).

7. Palliative radiotherapy for bone metastases: radiotherapy dose

A single fraction of 8 Gy was used in this model. A sensitivity analysis was performed to assess the impact of the range of number of fractions (1 to 5 fractions) on the average number of fractions per thyroid cancer patient (see chapter 18).

Sensitivity Analysis

The optimal number of fractions per thyroid cancer patient was 2.

As discussed by Delaney et al (1, 349), there were several data elements where there was uncertainty because of different proportions reported in the literature. These included the proportion of patients with papillary carcinoma with local recurrence (0.03 to 0.15), the proportion of papillary carcinoma patients with distant recurrence (0.04 to 0.11) and the proportion of papillary carcinoma patients with distant recurrence who have bone metastases (0.19 to 0.30).

There was also a range of number of fractions considered appropriate for radiotherapy for locally recurrent thyroid cancer (25 to 33 fractions), brain metastases (5 to 10 fractions) and bone metastases (1 to 5 fractions).

To assess the impact of these uncertainties on the average number of radiotherapy fractions in thyroid cancer patients, a one-way sensitivity analysis was performed for each of these variables. The impact of these variables on the average number of radiotherapy fractions is illustrated by a tornado diagram (Fig.1). The average number of radiotherapy fractions per thyroid cancer patient varied between 2.0 and 4.3. This range was largely due to the variation in the proportion of papillary carcinoma patients with local recurrence reported in the literature. The optimal fractionation tree for thyroid cancer is shown in Fig. 2.

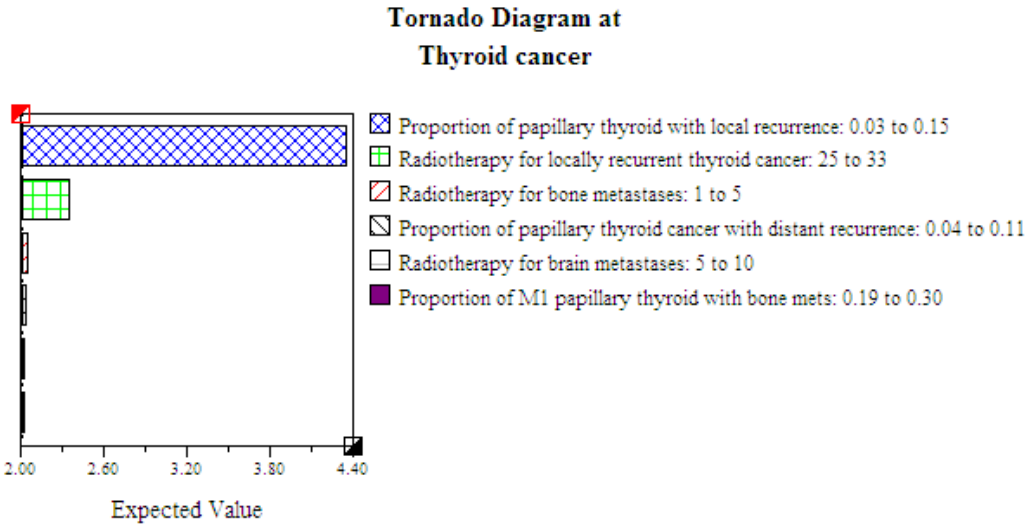

Figure 1. Thyroid cancer. Sensitivity analysis

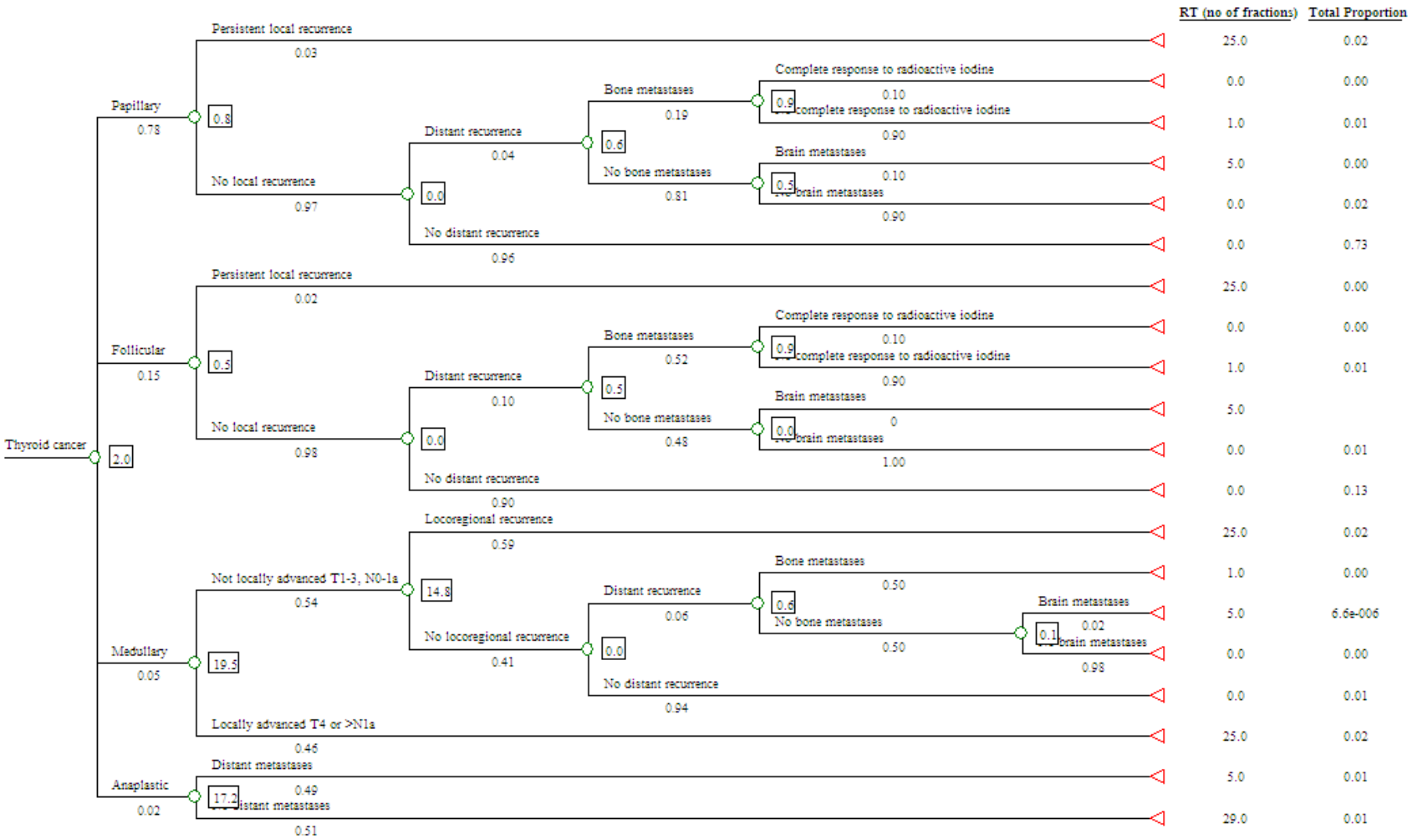

Figure 2. Thyroid cancer. Optimal fractionation tree

Chapter 14 Central Nervous System Cancer

Table 1. Central Nervous System Cancer. Number of fractions of radiotherapy – Sources of evidence

Outcome no (utilisation model)	Clinical scenario (utilisation model)	Outcome no (fractionation model)	Clinical scenario (addition to fractionation model)	No of fractions	Range of no of fractions	Level of evidence	References	Notes	Proportion of all CNS cancer patients
–	–	1	Brain cancer, good PS, gliomas, astrocytoma, glioblastoma multoforme	30	30−33	II	ACN guidelines (444) NCCN guidelines (445) Cancer Care Ontario guidelines (446) RCR guidelines (18) ESMO guidelines (447)	5	0.53
–	–	2	Brain cancer, good PS, gliomas, astrocytoma, anaplastic astrocytoma	30	30−33	II	ACN guidelines (444) NCCN guidelines (445) Cancer Care Ontario guidelines (446) RCR guidelines (18) ESMO guidelines (447)	5	0.07
–	–	3	Brain cancer, good PS, gliomas, astrocytoma, low grade (grade II),	25	25−30	II	ACN guidelines (444) NCCN guidelines (445) RCR guidelines (18)	4	0.01

Outcome no (utilisation model)	Clinical scenario (utilisation model)	Outcome no (fractionation model)	Clinical scenario (addition to fractionation model)	No of fractions	Range of no of fractions	Level of evidence	References	Notes	Proportion of all CNS cancer patients
			progression						
–	–	6	Brain cancer, good PS, gliomas, astrocytoma, pilocytic astrocytoma, recurrence requiring radiotherapy	29	29–30	IV	Marcus et al (448) Combs et al (449) Merchant et al (450)	8	0.01
–	–	7	Brain cancer, good PS, gliomas, astrocytoma, astrocytoma NOS and other astrocytomas, radiotherapy	25	25–30	II	ACN guidelines (444) NCCN guidelines (445) RCR guidelines (18)	9	0.07
–	–	9	Brain cancer, good PS, gliomas,	30	30–33	II	ACN guidelines (444) NCCN guidelines (445)	6	0.02

Outcome no (utilisation model)	Clinical scenario (utilisation model)	Outcome no (fractionation model)	Clinical scenario (addition to fractionation model)	No of fractions	Range of no of fractions	Level of evidence	References	Notes	Proportion of all CNS cancer patients
			oligodendroglioma, anaplastic oligodendroglioma				RCR guidelines (18) ESMO guidelines (447)		
–	–	10	Brain cancer, good PS, gliomas, oligodendroglioma, low grade oligodendroglioma, progression	25	25–30	II	ACN guidelines (444) NCCN guidelines (445) RCR guidelines (18)	4	0.03
–	–	13	Brain cancer, good PS, gliomas, ependymoma, low grade, incomplete resection	28	28–33	IV	NCCN guidelines (445) BCCA guidelines (451) NCI guidelines (452)	11	0.02
–	–	14	Brain cancer, good PS, gliomas, ependymoma, anaplastic	28	28–33	IV	NCCN guidelines (445) BCCA guidelines (451) NCI guidelines (452)	11	0.01

Outcome no (utilisation model)	Clinical scenario (utilisation model)	Outcome no (fractionation model)	Clinical scenario (addition to fractionation model)	No of fractions	Range of no of fractions	Level of evidence	References	Notes	Proportion of all CNS cancer patients
–	–	15	Brain cancer, good PS, embryonal tumours	30	30−31	II	NCCN guidelines (445) NCI guidelines (453)	12	0.03

Proportion of all CNS cancer patients in whom radiotherapy is recommended	**0.79 (79%)**
Proportion of all cancer patients = 0.79 x 0.015 =	**0.012 (1.2%)**
Average number of fractions per CNS cancer patient	**23.1**
Average number of fractions per treatment course = 23.1/0.75 =	**30.8**

Key to abbreviations in CNS cancer decision tree and tables

PS – Performance status

ACN – Australian Cancer Network

NCCN – National Comprehensive Cancer Network

RCR – Royal College of Radiologists

ESMO – European Society of Medical Oncology

NOS – Not otherwise specified

BCCA – British Columbia Cancer Agency

NCI – National Cancer Institute

Table 2. CNS Cancer. The incidence of attributes used to define number of radiotherapy fractions

Key	Population or subpopulation of interest	Attribute	Proportion of populations with this attribute	Quality of Information	References	Notes
A	All registry cancers	CNS cancer	0.015	α	AIHW (16)	1
B	CNS cancer, good PS	Glioma	0.92	γ	CBTRUS (454)	2
C	CNS cancer, good PS, glioma	Astrocytoma	0.87	γ	CBTRUS (454)	2
D	CNS cancer, good PS, glioma, astrocytoma	Glioblastoma	0.70	γ	CBTRUS (454)	2
E	CNS cancer, good PS, glioma, astrocytoma	Anaplastic astrocytoma	0.09	γ	CBTRUS (454)	2
F	CNS cancer, good PS, glioma, astrocytoma	Low grade (grade II) astrocytoma	0.02	γ	CBTRUS (454)	2
G	CNS cancer, good PS, glioma, astrocytoma, low grade astrocytoma (grade II)	Progression	0.77	ϵ	van den Bent et al (455)	3
H	CNS cancer, good PS, glioma, astrocytoma	Pilocytic astrocytoma	0.07	γ	CBTRUS (454)	2

Key	Population or subpopulation of interest	Attribute	Proportion of populations with this attribute	Quality of Information	References	Notes
I	CNS cancer, good PS, glioma, astrocytoma, pilocytic astrocytoma	Recurrence requiring radiotherapy	0.13	δ	Burkhard et al (456)	7
J	CNS cancer, good PS, glioma, astrocytoma	Astrocytoma NOS and other astrocytomas	0.12	γ	CBTRUS (454)	2
K	CNS cancer, good PS, gliomas, astrocytoma NOS and other astrocytomas	Radiotherapy indicated	0.77	ϵ	van den Bent et al (455)	9
L	CNS cancer, good PS, glioma	Oligodendroglioma	0.07	γ	CBTRUS (454)	2
M	CNS cancer, good PS, glioma, oligodendroglioma	Anaplastic oligodendroglioma	0.30	γ	CBTRUS (454)	3
N	CNS cancer, good PS, glioma, oligodendroglioma, low grade oligodendroglioma	Progression	0.77	ϵ	van den Bent et al (455)	3
O	CNS cancer, good PS, glioma	Ependymoma	0.06	γ	CBTRUS (454)	2
P	CNS cancer, good PS, glioma, ependymoma	Low grade	0.72	ϵ	Metellus et al (457)	10

Key	Population or subpopulation of interest	Attribute	Proportion of populations with this attribute	Quality of Information	References	Notes
Q	CNS cancer, good PS, glioma, ependymoma, low grade	Total resection	0.59	ϵ	Metellus et al (457)	10
R	CNS cancer, good PS	Embryonal tumours	0.03	γ	CBTRUS (454)	2
S	CNS cancer, good PS	Other neuro-epithelial tumours	0.05	γ	CBTRUS (454)	2

Central Nervous System Cancer

The optimal radiotherapy fractionation model for CNS cancer was based on the optimal radiotherapy utilisation model for CNS cancer (1, 349).

Treatment Guidelines

The following clinical practice guidelines for the management of CNS cancer were identified:

- ACN clinical practice guidelines for the management of adult gliomas: astrocytomas and oligodendrogliomas (2009) (444)
- NCCN clinical practice guidelines on central nervous system cancer (version 1.2011) (445)
- NCI guidelines on adult brain tumours (2010) (458)
- NCI guidelines on childhood astrocytomas (2010) (459)
- NCI guidelines on childhood ependymoma (2010) (452)
- NCI guidelines on childhood central nervous system embryonal tumours (2010) (453)
- Cancer Care Ontario guidelines on radiotherapy for newly diagnosed malignant glioma in adults (2005) (446)
- BC Cancer Agency neuro-oncology management guidelines (2009) (451)
- RCR radiotherapy dose-fractionation guidelines (2006) (18)
- ESMO clinical practice guidelines for diagnosis, treatment and follow-up of high-grade malignant glioma (2010) (447)

Explanatory Notes for Tables 1 and 2

1. Incidence of CNS cancer

CNS cancer constituted 1.5% of all cancers occurring in Australia in 2005 (16).

2. Incidence by histological type

In the optimal radiotherapy utilisation model for CNS cancer (1, 349), the branch "glioma" was divided into the branches of "pilocytic astrocytoma", "low grade astrocytoma" and "high grade astrocytoma". The branches "oligodendroglioma" and "ependymoma" were separate from the branch of "glioma". This was modified in the optimal radiotherapy fractionation model, so that the branch "glioma" was divided into "astrocytoma", "oligodendroglioma" and "ependymoma". The branch "astrocytoma" was further divided into the branches of "glioblastoma multiforme", "anaplastic astrocytoma", "low grade (grade II) astrocytoma", "pilocytic astrocytoma", and "astrocytoma not otherwise specified (NOS) and other astrocytomas".

The Central Brain Tumor Registry of the United States (CBTRUS) contains the largest aggregation of population-based data on the incidence of all primary CNS tumours in the USA. Data are collected from the National Program of Cancer Registries and the states belonging to the National Cancer Institute's SEER program, and include data from 48 population-based cancer registries. The 2011 CBTRUS report (454) contains data on 226791 primary CNS tumours diagnosed in the USA from 2004 to 2007, 84961 of which were malignant CNS tumours. Since this is the largest and most recent population-based database of CNS tumours available, these data were used in this model.

3. Oligodendroglioma and low grade (grade II) astrocytoma: role of radiotherapy

In the optimal radiotherapy utilisation model (1, 349), patients with oligodendroglioma were represented by one branch, with no division into anaplastic versus low grade disease. Patients with oligodendroglioma or low grade astrocytoma were recommended to have radiotherapy if the tumour was incompletely resected. In patients with a complete resection, those who were > 45 years of age, and those < 45 years with disease recurrence were recommended to have radiotherapy. The alternative view that all patients irrespective of age should be given radiotherapy was factored into the model by

changing the proportion of patients < 45 years to 0% in the sensitivity analysis (i.e. all patients were recommended to have radiotherapy irrespective of age).

The ACN guidelines (444) recommend radiotherapy as standard treatment for anaplastic oligodendroglioma. For low grade oligodendroglioma, the guidelines state that observation is acceptable in patients with gross technical resection, and good prognostic features (age < 40 years, low grade, 1p-, 19q-), allowing patients to avoid the risk of long-term radiotherapy toxicities until disease progression. For low grade astrocytoma, the guidelines state that consensus opinion is that for the majority of patients, an initial policy of observation post-surgery is appropriate, with treatment being deferred until there is clear radiological or symptomatic progression. The guidelines state that initial observation is not appropriate for patients with high-risk features who demonstrate early progression and poor median survival.

The NCCN guidelines (445) state that no consensus exists regarding the proper timing of post-operative radiotherapy in low grade astrocytomas, and that some oncologists advocate immediate radiotherapy, whereas others delay radiotherapy until tumour progression is evident. The guidelines recommend observation after maximal resection, with radiotherapy reserved for disease recurrence. The guidelines state that low grade astrocytomas tend to behave more aggressively in patients > 45 years and therefore immediate radiotherapy is also an option after resection. These guidelines recommend the same treatment approach for low grade oligodendroglioma.

In the optimal fractionation model, patients with oligodendroglioma were divided into two branches: those with anaplastic oligodendroglioma and those with low grade oligodendroglioma. Data from the CBTRUS (454) showed that of the patients diagnosed with oligodendroglioma, 30% of patients had anaplastic disease and 70% had low grade disease. In the model, all patients with anaplastic oligodendroglioma were recommended to have radiotherapy. Patients with low grade oligodendroglioma or low grade astrocytoma were recommended to have radiotherapy on disease progression. In the EORTC study in which patients with low grade glioma were randomised to early or

delayed radiotherapy post-surgery, 77% of patients had disease progression on observation (455). This proportion was used in the model to divide patients with low grade oligodendroglioma or low grade astrocytoma into two branches: those with disease progression and therefore recommended to have radiotherapy (0.77) and those without progression and not recommended to have radiotherapy (0.23). This potentially underestimated the proportion of patients who should optimally be treated with radiotherapy, as some patients would be treated with immediate radiotherapy due to symptoms, presence of high-risk features, or physician's preference. To account for this uncertainty, in the optimal fractionation model, a sensitivity analysis was performed varying the proportion of patients with disease progression from 0.77 to 1.0 (i.e. 77 to 100% of patients with low grade oligodendroglioma or low grade astrocytoma were recommended to have radiotherapy, either immediately after surgery or deferred until disease progression).

4. Low grade oligodendroglioma and low grade (grade II) astrocytoma: radiotherapy dose

The ACN guidelines (444) and the NCCN guidelines (445) recommend a dose of 45 to 54 Gy in 1.8 to 2 Gy per fraction (25 to 30 fractions). The RCR guidelines (18) recommend a dose of 45 to 50.4 Gy in 25 to 28 fractions. These guidelines make reference to the EORTC randomised trial which showed no difference in survival between 45 Gy in 25 fractions and 59.4 Gy in 33 fractions in patients with low grade glioma (460). In the Intergroup randomised trial conducted by North Central Cancer Treatment Group, RTOG and ECOG, again no survival difference was observed when 50.4 Gy in 28 fractions was compared with 64.8 Gy in 36 fractions in patients with low grade glioma (461). In another EORTC randomised study, patients with low grade glioma were randomised to immediate post-operative radiotherapy or deferred radiotherapy upon progression (455). Both groups received 54 Gy in 30 fractions. With a median follow-up of 7.8 years, immediate treatment was associated with an increase in progression-free survival (median 5.3 years versus 3.4 years) but not overall survival (7.4 years versus 7.2 years).

The shortest dose fractionation schedule recommended in the guidelines, 45 Gy in 25 fractions, was used in this model. A sensitivity analysis was performed to assess the impact of the range of number of fractions (25 to 30 fractions) on the average number of fractions per CNS cancer patient.

5. High grade astrocytoma (glioblastoma multiforme and anaplastic astrocytoma): radiotherapy dose

The dose fractionation schedules recommended in the guidelines are summarised in table 3.

Table 3. High grade astrocytoma: radiotherapy dose fractionation schedules recommended in the guidelines

Guidelines	Radiotherapy dose
ACN guidelines (444)	60 Gy in 30 fractions
NCCN guidelines (445)	60 Gy in 30-33 fractions
Cancer Care Ontario guidelines (446)	60 Gy in 30 fractions
RCR guidelines (18)	60 Gy in 30 fractions
ESMO guidelines (447)	60 Gy in 30-33 fractions

The guidelines justify their choice of fractionation using data from the MRC randomised study which compared 45 Gy in 20 fractions to 60 Gy in 30 fractions in 443 patients with high grade astrocytoma (462). There was a statistically significant improvement in survival with the higher dose. At 12 months, the survival rates for the 45 Gy and 60 Gy arms were 29% and 39% respectively, and the corresponding rates at 18 months were 11% and 18%. This corresponded to an improvement in median survival of two months in the 60 Gy arm.

Stupp et al (463) conducted a randomised trial of 573 patients with glioblastoma comparing radiotherapy alone with radiotherapy plus concurrent and adjuvant temozolomide. The dose fractionation schedule used was 60 Gy in 30 fractions.

There was a statistically significant improvement in survival in the chemoradiotherapy arm. The median survival was 12.1 months in the radiotherapy arm and 14.6 months in the chemoradiotherapy arm. The 2-year survival rate was 10.4% with radiotherapy alone and 26.5% with chemoradiotherapy.

The dose fractionation schedule, 60 Gy in 30 fractions, was used in this model for patients with high grade astrocytoma. A sensitivity analysis was performed to assess the impact of the range of number of fractions (30 to 33 fractions) on the average number of fractions per CNS cancer patient.

6. Anaplastic oligodendroglioma: radiotherapy dose

The ACN guidelines (444) and the RCR guidelines (18) recommend a dose of 60 Gy in 30 fractions for anaplastic oligodendroglioma. The NCCN guidelines (445) and the ESMO guidelines (447) recommend a dose of 60 Gy in 30 to 33 fractions.

The dose fractionation schedule, 60 Gy in 30 fractions, was used in this model. A sensitivity analysis was performed to assess the impact of the range of number of fractions (30 to 33 fractions) on the average number of fractions per CNS cancer patient.

7. Pilocytic astrocytoma: role of radiotherapy

In the optimal radiotherapy utilisation model (1, 349), patients with incompletely resected pilocytic astrocytoma and those with recurrence after initial complete resection were recommended to have radiotherapy. The NCI guidelines on childhood astrocytomas (459) state that surgical resection is the primary treatment, and that radiotherapy is usually reserved until progressive disease is documented, and its use may be further delayed through the use of chemotherapy, a strategy that is commonly employed in young children. The guidelines also state that patients who relapse after surgery alone should be considered for another surgical resection, and if this is not feasible, local

radiotherapy is the usual treatment. In the fractionation model, patients with disease progression after initial resection were recommended to have radiotherapy.

Burkhard et al (456) reported on a population-based study of 987 patients diagnosed with astrocytic and oligodendroglial tumours in Zurich, Switzerland, between 1980 and 1994. Of the 55 patients with pilocytic astrocytoma, 7 patients (13%) received radiotherapy. Due-Tonnessen et al (464) reported on a retrospective study of 110 consecutive patients with cerebellar astrocytoma treated at National Hospital, Oslo, Norway, between 1960 and 2001, and found that spontaneous regression of residual tumour was more frequent than growth of residual tumour. Only 5 patients (5%) in their series received radiotherapy. Benesch et al (465) reported that 9% of patients with cerebellar pilocytic astrocytoma in their series received radiotherapy.

It is difficult to determine the optimal proportion of patients with pilocytic astrocytoma who should receive radiotherapy, as patients with tumour recurrence following surgery may be treated by second surgery, chemotherapy or radiotherapy, according to the recommendations of the NCI guidelines. In this model, radiotherapy was recommended for 13% of patients with pilocytic astrocytoma, based on the actual radiotherapy utilisation data reported by Burkhard et al (456), as this study was population-based and included all pilocytic astrocytomas (the other two series included only cerebellar tumours).

8. Pilocytic astrocytoma: radiotherapy dose

No specific dose fractionation schedules are recommended in the guidelines and no high level evidence exists regarding the optimal dose of radiotherapy.

The NCI guidelines (459) state that for patients in whom radiotherapy is indicated, conformal radiotherapy or stereotactic radiotherapy approaches appear effective and offer the potential for reducing the acute and long-term toxicities, making reference to the studies reported by Marcus et al (448), Combs et al (449) and Merchant et al (450). Marcus et al (448) reported on 50

low grade glioma patients who received stereotactic radiotherapy for disease progression, 35 of whom had pilocytic astrocytoma. The mean radiotherapy dose was 52.2 Gy in 29 fractions (range 50.4 Gy to 58 Gy). Local progression occurred in 6 patients. The 8-year overall survival rate was 82%. Combs et al (449) reported on 15 patents with optic glioma, 13 of whom had pilocytic astrocytoma, who received stereotactic radiotherapy. The mean dose was 52.2 Gy in 29 fractions (range 45.2 to 57.6 Gy). One patient died of disease progression. The 5-year overall survival rate was 90%. Merchant et al (450) reported on 78 patients with low grade glioma, 50 of whom had pilocytic astrocytoma. Patients received a dose of 54 Gy in 30 fractions. Of the 78 patients, 13 patients experienced disease progression. The 5-year and 10-year overall survival rates were 98.5% and 95.9% respectively.

In the absence of high level evidence suggesting the optimal dose in patients with pilocytic astrocytoma, the dose fractionation schedule, 52.2 Gy in 29 fractions, was used in the model. A sensitivity analysis was performed to assess the impact of the range of number of fractions (29 to 30 fractions) on the average number of fractions per CNS cancer patient.

9. Astrocytoma NOS and other astrocytomas

Astrocytoma NOS is a non-specific histological diagnosis that is not included in the WHO histological classification of brain tumours, hence none of the guidelines specifically discuss the management of patients with this diagnosis. However, all available epidemiological databases of brain tumours, including the 2011 CBTRUS data used in this model, include a proportion of cases with this diagnosis. For the purposes of this model, it is assumed that most cases of astrocytoma NOS are low grade astrocytomas, since it would be comparatively easier to make a histological diagnosis of high grade astrocytoma. As for low grade astrocytoma, 77% of these patients were recommended to have radiotherapy, with a sensitivity analysis performed varying the proportion of patients with disease progression from 0.77 to 1.0 (see note 3). The same dose fractionation schedule used for low grade astrocytoma, 45 Gy in 25 fractions, was used in the model. A sensitivity analysis was performed to assess the

impact of the range of number of fractions (25 to 30 fractions) on the average number of fractions per CNS cancer patient (see note 4).

10. Ependymoma: role of radiotherapy

In the optimal radiotherapy utilisation model (1, 349), all patients with ependymoma were recommended to have radiotherapy. The NCCN guidelines (445) state that the survival benefits of radiotherapy after surgery have been established for anaplastic ependymomas and suboptimally resected tumours. The NCI guidelines on childhood ependymoma (452) also recommend adjuvant radiotherapy for grade II ependymomas with residual disease post-surgery and anaplastic ependymoma.

Therefore in this model, patients with anaplastic ependymoma and incompletely resected grade II ependymoma were recommended to have radiotherapy. Metellus et al (457) reported on a retrospective study of 152 patients with intracranial ependymomas from 24 neurosurgical centres in France between 1990 and 2004. Of these, 109 patients (72%) were diagnosed with grade II and 43 patients (28%) with grade III tumours. Of the patients with grade II ependymoma, 45 (41%) had incomplete tumour resection.

11. Ependymoma: radiotherapy dose

The NCCN guidelines (445) recommend a dose of 54 to 59.4 Gy in 1.8 to 2 Gy per fraction (27 to 33 fractions). The BC Cancer Agency guidelines (451) state that the optimal radiation volume for intracranial primary lesions is controversial, and recommend consideration of localised radiotherapy for patients with low grade lesions, supratentorial site, complete resections, negative MRI and no evidence of spinal seeding. Localised radiotherapy may also be considered for high grade supratentorial lesions, but the guidelines state that no definite recommendations can be made. All other patients should receive craniospinal radiotherapy. They recommend a dose of approximately 35 to 40 Gy to the craniospinal axis, and a boost of approximately 15 to 20 Gy to the intracranial

primary site. The total dose is approximately 50 to 60 Gy to the primary site (28 to 33 fractions in 1.8 Gy per fraction).

The NCI guidelines for childhood ependymoma (452) recommend a dose of 54 to 55.8 Gy to the tumour bed, and 36 Gy to the craniospinal axis, if radiotherapy to this region is indicated. Given in 1.8 Gy per fraction, the total dose is delivered over 30 to 31 fractions.

In summary, a dose range of 50 to 60 Gy is recommended in the guidelines. No high level evidence is available to suggest the optimal dose fractionation schedule. The lowest in the range, 50.4 Gy in 28 fractions, was used in the model. A sensitivity analysis was performed to assess the impact of the range of number of fractions (28 to 33 fractions) on the average number of fractions per CNS cancer patient.

12. Embryonal tumours

The NCCN guidelines (445) recommend a dose of 23.4 to 36 Gy to the craniospinal axis, depending on the risk of recurrence, and a boost to the primary site to a total dose of 55.8 Gy for patients with medulloblastoma. Given in 1.8 Gy per fraction, the total dose is delivered in 31 fractions. The NCI guidelines on childhood CNS embryonal tumours (453) recommend a dose of 30 to 36 Gy to the craniospinal axis, and a total dose of 54 to 55 Gy to the primary site.

The NCI guidelines (453) make reference to the randomised studies reported by Kortmann et al (466) and Thomas et al (467). Kortmann et al (466) reported on 137 patients with medulloblastoma post-surgery who were randomised to chemotherapy followed by radiotherapy or immediate post-operative radiotherapy followed by maintenance chemotherapy. All patients received radiotherapy to the craniospinal axis followed by a boost to the posterior fossa to a total dose of 55.2 Gy in 32 fractions. This study showed that maintenance chemotherapy was more effective in patients with low-risk medulloblastoma. Thomas et al (467) reported on 126 patients with low stage medulloblastoma

who were randomised to reduced-dose (23.4 Gy in 13 fractions) or standard-dose (36 Gy in 20 fractions) craniospinal irradiation. All patients received posterior fossa irradiation to a total dose of 54 Gy in 30 fractions. This study showed that reduced-dose craniospinal irradiation was associated with an increased risk of early relapse and a lower 5-year overall survival compared to standard-dose craniospinal irradiation.

The shortest dose fractionation schedule in the range, 54 Gy in 30 fractions, was used in the model. A sensitivity analysis was performed to assess the impact of the range of number of fractions (30 to 32 fractions) on the average number of fractions per CNS cancer patient.

Sensitivity Analysis

The optimal number of fractions per CNS cancer patient was 23.1.

There was uncertainty regarding the proportion of patients with low grade astrocytoma, astrocytoma NOS or low grade oligodendroglioma who should be treated with radiotherapy (0.77 to 1). There was also a range of number of fractions considered appropriate for radiotherapy for glioblastoma multiforme (30 to 33 fractions), anaplastic astrocytoma (30 to 33 fractions), low grade astrocytoma (25 to 30 fractions), pilocytic astrocytoma (29 to 30 fractions), anaplastic oligodendroglioma (30 to 33 fractions), low grade oligodendroglioma (25 to 30 fractions), ependymoma (28 to 33 fractions), and embryonal tumours (30 to 32 fractions).

To assess the impact of these uncertainties on the average number of radiotherapy fractions in CNS cancer patients, a one-way sensitivity analysis was performed for each of these variables. The impact of these variables on the average number of radiotherapy fractions is illustrated by a tornado diagram (Fig 1). The average number of radiotherapy fractions per CNS cancer patient varied between 23.1 and 24.7. The optimal fractionation tree for CNS cancer is shown in Fig. 2.

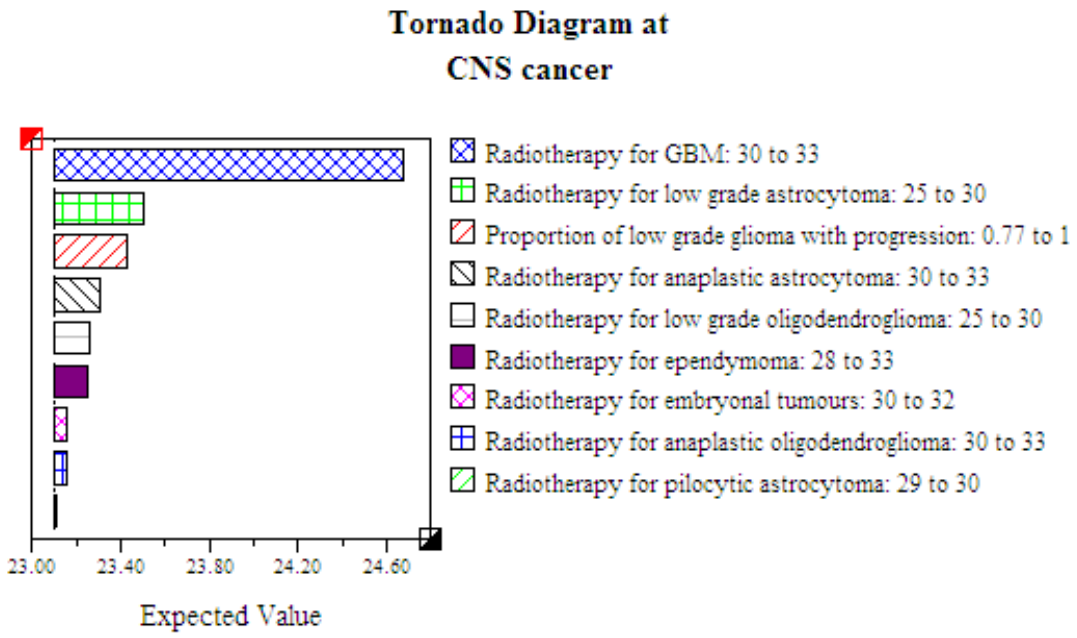

Figure 1. CNS cancer. Sensitivity analysis

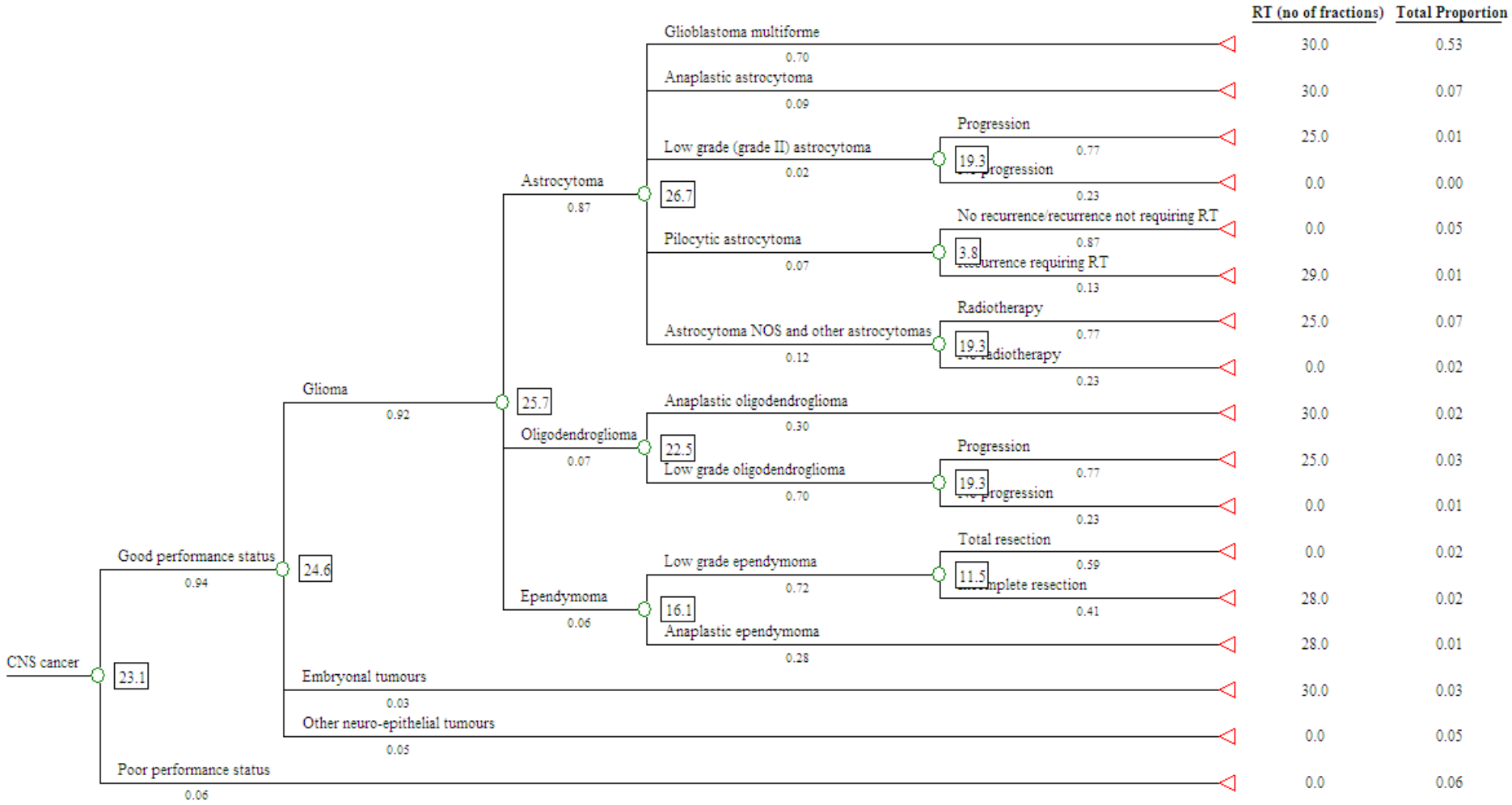

Figure 2. CNS cancer. Optimal fractionation tree

Chapter 15 Myeloma

Table 1. Myeloma. Number of fractions of radiotherapy – Sources of evidence

Outcome no (utilisation model)	Clinical scenario (utilisation model)	Outcome no (fractionation model)	Clinical scenario (addition to fractionation model)	No of fractions	Range of no of fractions	Level of evidence	References	Notes	Proportion of all myeloma patients
−	−	1	Solitary plasmacytoma	20	20−25	III	BCSH/UKMF guidelines (468-469) NCCN guidelines (470)	2	0.05
−	−	2	Multiple myeloma, symptomatic, spinal cord compression	10	−	III	BCSH/UKMF guidelines (471)	4	0.07
1	Symptomatic, age < 60 years, relapse after bone marrow transplant, bone pain after bisphosphonates	3	Multiple myeloma, symptomatic, no spinal cord compression, age < 60 years, relapse after bone marrow transplant, bone pain after	1	–	III	BCSH/UKMF guidelines (471)	5	0.03

Outcome no (utilisation model)	Clinical scenario (utilisation model)	Outcome no (fractionation model)	Clinical scenario (addition to fractionation model)	No of fractions	Range of no of fractions	Level of evidence	References	Notes	Proportion of all myeloma patients
			bisphosphonates						
5	Symptomatic, age < 60 years, unable to complete bone marrow transplant, bone pain after bisphosphonates	7	Multiple myeloma, symptomatic, no spinal cord compression, age < 60 years, unable to complete bone marrow transplant, bone pain after bisphosphonates	1	–	III	BCSH/UKMF guidelines (471)	5	0.01
7	Symptomatic, age < 60 years, unsuitable for bone marrow transplant, bone pain after bisphosphonates	9	Multiple myeloma, symptomatic, no spinal cord compression, age < 60 years, unsuitable for	1	–	III	BCSH/UKMF guidelines (471)	5	0.01

Outcome no (utilisation model)	Clinical scenario (utilisation model)	Outcome no (fractionation model)	Clinical scenario (addition to fractionation model)	No of fractions	Range of no of fractions	Level of evidence	References	Notes	Proportion of all myeloma patients
			bone marrow transplant, bone pain after bisphosphonates						
9	Symptomatic, age > 60 years, bone pain after bisphosphonates	11	Multiple myeloma, symptomatic, no spinal cord compression, age > 60 years, bone pain after bisphosphonates	1	–	III	BCSH/UKMF guidelines (471)	5	0.28

Proportion of all myeloma patients in whom radiotherapy is recommended	**0.46 (46%)**
Proportion of all cancer patients = 0.46 x 0.01 =	**0.0046 (0.46%)**
Average number of fractions per myeloma patient	**2.1**
Average number of fractions per treatment course = 2.1/0.46 =	**4.6**

Key to abbreviations in myeloma decision tree and tables

BCSH/UKMF – British Committee for Standards in Haematology/UK Myeloma Forum

Table 2. Myeloma. The incidence of attributes used to define number of radiotherapy fractions

Key	Population or subpopulation of interest	Attribute	Proportion of populations with this attribute	Quality of Information	References	Notes
A	All registry cancers	Myeloma	0.01	α	AIHW (16)	1
B	Myeloma	Solitary plasmacytoma	0.05	γ	SEER (172)	2
C	Myeloma, multiple myeloma, symptomatic	Spinal cord compression	0.03 0.08 0.18	λ λ λ	Talamo et al (472) Camacho et al (473) Woo et al (474)	3

Myeloma

The optimal radiotherapy fractionation model for myeloma was based on the optimal radiotherapy utilisation model for myeloma (1, 419).

Treatment Guidelines

The following clinical practice guidelines for the management of multiple myeloma and plasmacytoma were identified:

- British Committee for Standards in Haematology (BCSH) and UK Myeloma Forum (UKMF) guidelines on the diagnosis and management of multiple myeloma (2010) (471)
- BCSH and UKMF guidelines on the diagnosis and management of solitary plasmacytoma of bone, extramedullary plasmacytoma and multiple solitary plasmacytomas: 2009 update (2009) (468)
- BCSH and UKMF guidelines on the diagnosis and management of solitary plasmacytoma of bone, extramedullary plasmacytoma and multiple solitary plasmacytomas (2004) (469)
- NCCN guidelines on multiple myeloma (version 1.2011) (470)
- NCI PDQ guidelines on plasma cell neoplasms (including multiple myeloma) (2010) (475)

Explanatory Notes for Tables 1 and 2

1. Incidence of myeloma

Myeloma constituted 1.2% of all cancers occurring in Australia in 2005 (16).

2. Radiotherapy for solitary plasmacytoma

The NCCN guidelines on multiple myeloma (470) recommend primary radiotherapy to a dose of 45 Gy or more for patients with solitary

plasmacytoma. No specific dose fractionation schedules are recommended. The British Committee for Standards in Haematology (BCSH) and UK Myeloma Forum (UKMF) guidelines on plasmacytoma (468) (469) recommend radical radiotherapy for solitary plasmacytoma. The guidelines recommend 40 Gy in 20 fractions, and that a higher dose of 50 Gy in 25 fractions should be considered for lesions > 5 cm. The guidelines make reference to the study reported by Knobel et al (476) who retrospectively reviewed 206 patients with solitary plasmacytoma of bone. The median radiotherapy dose was 40 Gy (range 20 to 64 Gy) and the median number of fractions was 20 (range 4 to 33). Local relapse occurred in 21 (14%) out of 148 patients who received radiotherapy alone compared with 4 (80%) out of 5 patients who were treated with surgery +/- chemotherapy. After adjusting radiotherapy dose to 2 Gy per fraction biologically equivalent dose, no dose-response relationship was observed for doses higher than 30 Gy. The guidelines also make reference to the study of Tsang et al (477) who reported on 32 patients with solitary plasmacytoma treated at the Princess Margaret Hospital, Canada. There was no convincing dose-response relationship above 35 Gy. Tumour bulk was found to be the most significant factor influencing local control with 100% local control for lesions ≤ 5 cm and 38% for lesions > 5 cm, suggesting that bulky lesions > 5 cm require a higher dose. For patients with multiple solitary plasmacytomas, the guidelines state that treatment approaches are variable and that no clear recommendation for the treatment of multiple solitary plasmacytomas can yet be made.

The SEER data showed that from 2000 to 2009, 5% of patients diagnosed with myeloma had solitary plasmacytoma and 95% of patients had multiple myeloma (172). These data were used to divide patients with myeloma into two branches in the model: those with solitary plasmacytoma (0.05) and those with multiple myeloma (0.95). All patients with solitary plasmacytoma were recommended having radiotherapy. The dose fractionation schedule, 40 Gy in 20 fractions, was used in the model. A sensitivity analysis was performed to assess the impact of the range of number of fractions (20 to 25 fractions) on the optimal number of fractions per myeloma patient.

3. Radiotherapy for patients spinal cord compression: incidence of spinal cord compression in newly diagnosed multiple myeloma patients

The BCSH and UKMF guidelines on multiple myeloma (471), NCI guidelines on plasma cell neoplasms (475) and NCCN guidelines on multiple myeloma (470) recommend radiotherapy for spinal cord compression secondary to myeloma. Single institutional studies have shown that 3-18% of myeloma patients have spinal cord compression as their initial presentation (472-474), with a median incidence of 8%. This proportion was used in the model to divide multiple myeloma patients with symptomatic disease into two branches: those with spinal cord compression (0.08) and those without spinal cord compression at diagnosis (0.92). A sensitivity analysis was performed to assess the range of proportions of patients who presented with spinal cord compression (0.03 to 0.18) on the optimal number of fractions per myeloma patient.

4. Palliative radiotherapy for multiple myeloma patients with spinal cord compression: radiotherapy dose

The BCSH and UKMF guidelines (471) recommend the dose fractionation schedule, 30 Gy in 10 fractions, and justify their recommendation referring to the study reported by Rades et al (478). In this retrospective multi-centre study, data of 172 myeloma patients who received radiotherapy between 1994 and 2004 for spinal cord compression were evaluated. Sixty-one patients received short course radiotherapy (8 Gy in 1 fraction or 20 Gy in 5 fractions), and 111 patients received long course radiotherapy (30 Gy in 10 fractions, 37.5 Gy in 15 fractions or 40 Gy in 20 fractions). This study showed that patients who received long course radiotherapy had better functional outcome. A subgroup analysis of patients who received long course radiotherapy demonstrated a similar functional outcome for those who received 30 Gy in 10 fractions, compared with those who received 37.5 Gy in 15 fractions or 40 Gy in 20 fractions. The dose fractionation schedule recommended in the guidelines, 30 Gy in 10 fractions, was used in the model.

5. Palliative radiotherapy for multiple myeloma patients with bone pain: radiotherapy dose

The BCSH and UKMF guidelines (471) recommend 8 Gy in 1 fraction for pain control. Leigh et al (479) reported on a retrospective review of 101 patients with multiple myeloma treated with palliative radiotherapy. A total of 316 sites were treated. The most common symptom was bone pain. Symptom relief was obtained in 92% of sites receiving a total dose less than 10 Gy and 98% of sites receiving 10 Gy or more. No dose-response was demonstrated.

The dose fractionation schedule, 8 Gy in 1 fraction, was used in the model.

Sensitivity Analysis

The optimal number of fractions per myeloma patient was 2.1.

There was uncertainty regarding the data on the proportion of myeloma patients presenting with spinal cord compression because of different proportions reported in the literature (0.03 to 0.18). There was also a range of number of fractions considered appropriate for solitary plasmacytoma (20 to 25 fractions). To assess the impact of these uncertainties on the average number of radiotherapy fractions per myeloma patient, a one-way sensitivity analysis was performed for these variables. The impact of these variables on the average number of radiotherapy fractions is illustrated by a tornado diagram (Fig. 1). The average number of radiotherapy fractions per myeloma patient varied between 1.6 and 3. The optimal fractionation tree for myeloma is shown in Fig. 2.

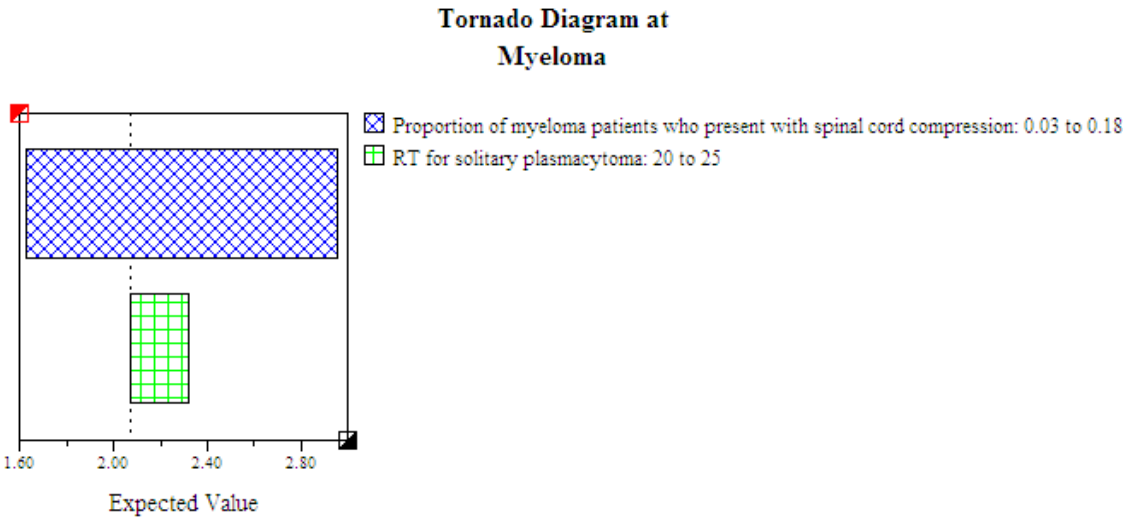

Figure 1. Myeloma. Sensitivity analysis

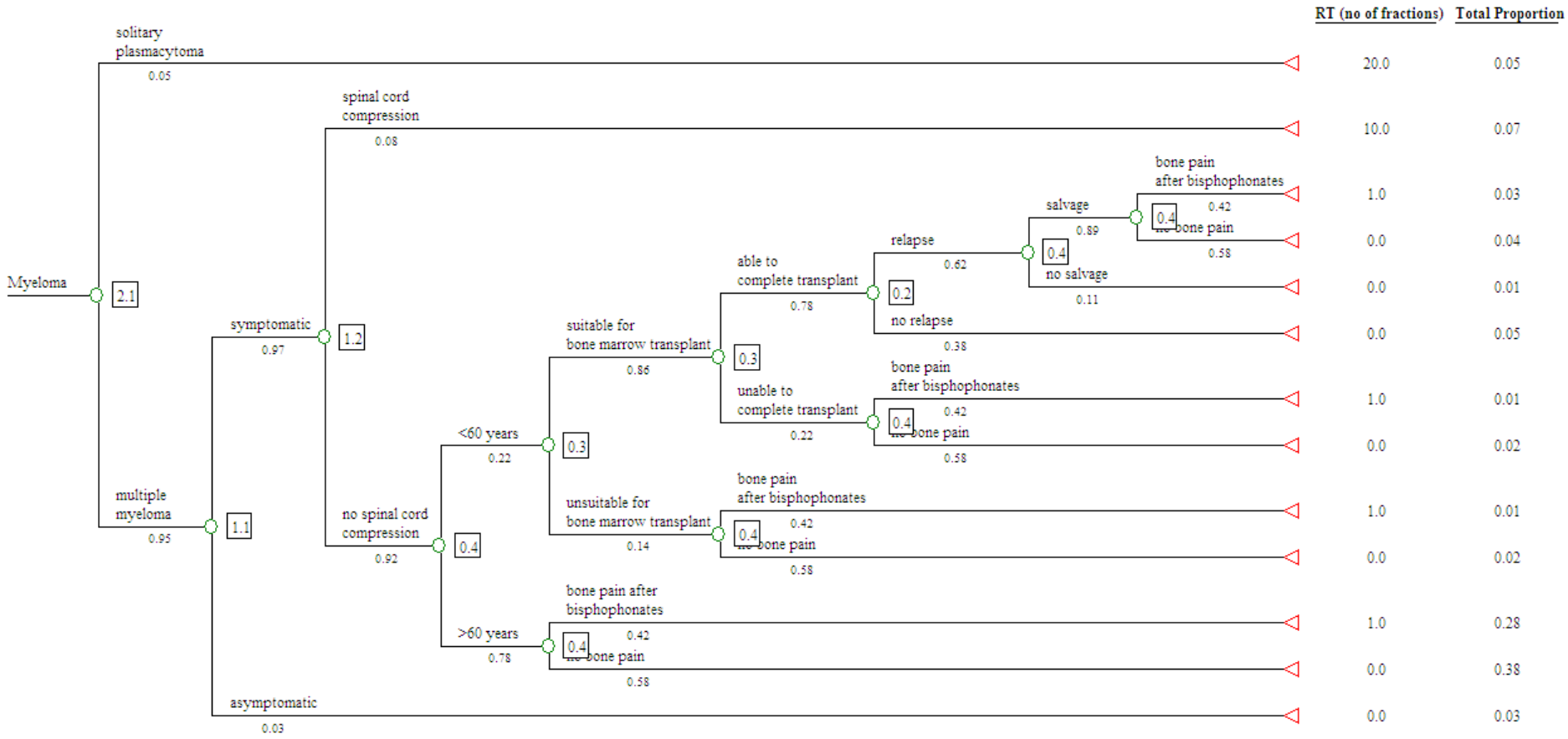

Figure 2. Myeloma. Optimal fractionation tree

Chapter 16 Sarcoma

16.1 Soft Tissue Sarcoma

Table 1. Soft Tissue Sarcoma. Number of fractions of radiotherapy - Sources of evidence

Outcome no (utilisation model)	Clinical scenario (utilisation model)	Outcome no (fractionation model)	Clinical scenario (addition to fractionation model)	No of fractions	Range of no of fractions	Level of evidence	References	Notes	Proportion of all soft tissue sarcoma patients
–	–	1	Stage TxNxM0	25	25–33	II, III	RCR guidelines (18)	3	0.84
–	–	2	Stage TxNxM1	1	1–15	–	RCR guidelines (18)	4	0.16

Proportion of all soft tissue sarcoma patients in whom radiotherapy is recommended	**1 (100%)**
Proportion of all cancer patients = 1 x 0.005 =	**0.005 (0.5%)**
Average number of fractions per soft tissue sarcoma patient	**22.1**
Average number of fractions per treatment course = 22.1/1 =	**22.1**

Key to abbreviations in soft tissue sarcoma decision tree and tables

RCR – Royal College of Radiologists

Table 2. Soft Tissue Sarcoma. The incidence of attributes used to define number of radiotherapy fractions

Key	Population or subpopulation of interest	Attribute	Proportion of populations with this attribute	Quality of Information	References	Notes
A	All registry cancers	Soft tissue sarcoma	0.005	α	AIHW (16)	1
B	Soft tissue sarcoma	Stage TxNxM0	0.84	γ	SEER (172)	2

Soft Tissue Sarcoma

Sarcoma was not previously included in the optimal radiotherapy utilisation model (1-2) as its incidence was < 1% at the time the model was constructed. Sarcoma constituted 1% of all cancers occurring in Australia in 2005 (16). It was therefore included as a new cancer site in the optimal radiotherapy fractionation model.

Treatment Guidelines

The following clinical practice guidelines for the management of soft tissue sarcoma were identified:

- NCCN clinical practice guidelines on soft tissue sarcoma (version 1.2011) (480)
- NCI PDQ guidelines on adult soft tissue sarcoma (2010) (481)
- RCR radiotherapy dose-fractionation guidelines (2006) (18)
- BC Cancer Agency musculoskeletal and sarcoma management guidelines (2011) (482)

Explanatory Notes for Tables 1 and 2

1. Incidence of soft tissue sarcoma

Soft tissue sarcoma constituted 0.5% of all cancers occurring in Australia in 2005 (16).

2. Stage data

According to the SEER database (172), 92% of patients diagnosed with soft tissue sarcoma between 2000 and 2008 had stage data available. Of these patients, 16% had metastatic disease.

3. Non-metastatic soft tissue sarcoma: radiotherapy dose

The NCI guidelines (481), BC Cancer Agency guidelines (482) and NCCN guidelines (480) recommend adjuvant radiotherapy for patients who undergo limb-sparing surgery for soft tissue sarcoma of the extremities, and for patients with soft tissue sarcoma of the retroperitoneum, trunk, and head and neck, as it is usually difficult to obtain wide surgical margins. The guidelines recommend that surgery alone can be considered in patients with low grade tumours of the extremity or superficial trunk that are ≤ 5 cm in diameter and have microscopically negative surgical margins. No published data could be identified despite an extensive literature search regarding the proportion of patients in whom adjuvant radiotherapy is not indicated. The guidelines also recommend primary radiotherapy for unresectable tumours. For the purposes of the model, all patients with non-metastatic soft tissue sarcoma were recommended to have radiotherapy. It is acknowledged that radiotherapy is not indicated in a small proportion of these patients, however this will have a very small impact on the overall optimal number of radiotherapy fractions for cancer patients due to the low incidence of soft tissue sarcoma.

The RCR guidelines (18) recommend 50 Gy in 25 fractions for pre-operative radiotherapy, and 60 to 66 Gy in 30 to 33 fractions for post-operative radiotherapy. The guidelines make reference to the randomised controlled study which compared pre-operative radiotherapy (50 Gy in 25 fractions) with post-operative radiotherapy (66 Gy in 33 fractions) in patients with soft tissue sarcoma of the extremities (483-485). This study showed that there was no difference in local control between the two arms, and that pre-operative radiotherapy was associated with an increased risk of wound complications but less long-term functional deficit.

For unresectable tumours, the RCR guidelines (18) recommend 66 Gy in 33 fractions, making reference to the study reported by Kepka et al (486) which showed an improvement in local control and survival in patients who received a dose of ≥ 63 Gy compared with < 63 Gy, but that the rate of major radiotherapy complications was significantly higher in patients who received ≥ 68 Gy compared to those who received < 68 Gy.

In this model, the shortest dose fractionation schedule, 50 Gy in 25 fractions, was used for patients with non-metastatic soft tissue sarcoma. A sensitivity analysis was performed to assess the impact of the range of number of fractions (25 to 33 fractions) on the average number of fractions per soft tissue sarcoma patient.

4. Metastatic soft tissue sarcoma: radiotherapy dose

The BC Cancer Agency guidelines (482) state that radiotherapy can be used to palliate symptoms from incurable sarcoma, and that it is usually possible to use short palliative courses, however sometimes higher doses are required to achieve local control. The RCR guidelines (18) recommend dose fractionation schedules ranging from single fractions of 6 to 8 Gy, to 40 Gy in 15 fractions, depending upon clinical circumstances and field size.

In this model, the shortest dose fractionation schedule, 6 Gy in 1 fraction, was used for patients with metastatic soft tissue sarcoma. A sensitivity analysis was performed to assess the impact of the range of number of fractions (1 to 15 fractions) on the average number of fractions per soft tissue sarcoma patient.

Sensitivity Analysis

The optimal number of fractions per soft tissue sarcoma patient was 21.2.

A range of number of fractions was considered appropriate for radiotherapy for non-metastatic soft tissue sarcoma (25 to 33 fractions) and metastatic soft tissue sarcoma (1 to 15 fractions).

To assess the impact of these uncertainties on the average number of radiotherapy fractions per soft tissue sarcoma patient, a one-way sensitivity analysis was performed for these variables. The impact of these variables on the average number of radiotherapy fractions is illustrated by a tornado diagram (Fig. 1). The average number of radiotherapy fractions per soft tissue sarcoma

patient varied between 21.2 and 27.9. The optimal fractionation tree for soft tissue sarcoma is shown in Fig. 2.

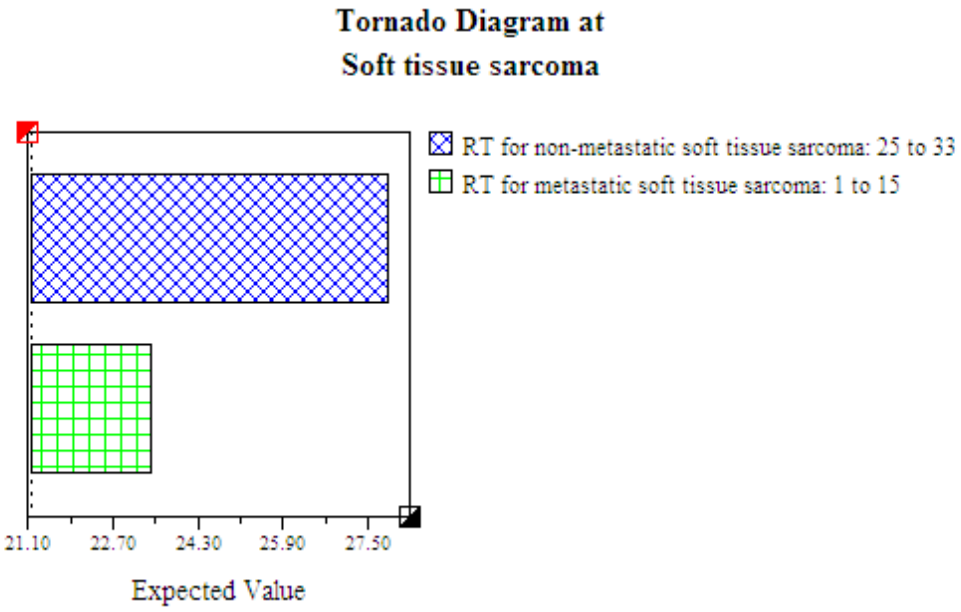

Figure 1. Soft tissue sarcoma. Sensitivity analysis

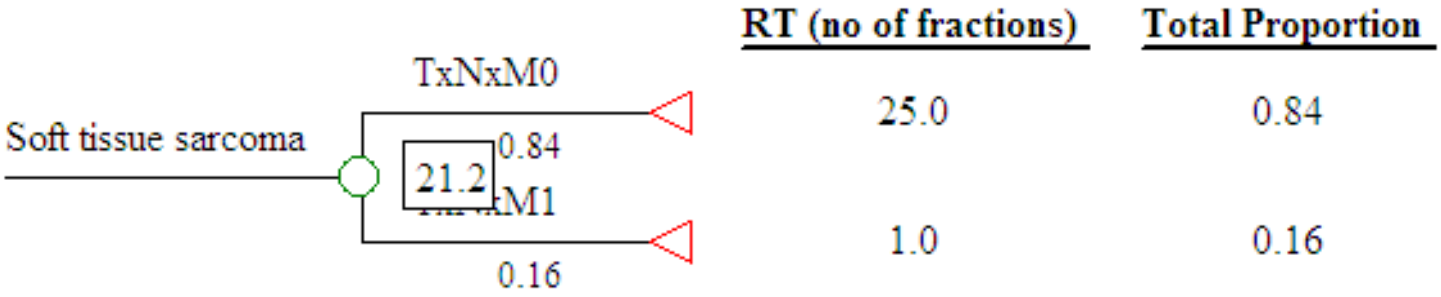

Figure 2. Soft tissue sarcoma. Optimal fractionation tree

16.2 Bone Sarcoma

Bone Sarcoma

Bone sarcoma constituted 0.2% of all cancers occurring in Australia in 2005 (16).

The following clinical practice guidelines for the management of bone sarcoma were identified:

- NCCN clinical practice guidelines on bone cancer (version 1.2011) (487)
- NCI PDQ guidelines on osteosarcoma and malignant fibrous histiocytoma of bone (2010) (488)
- NCI PDQ guidelines on Ewing sarcoma family of tumours (2010) (489)
- RCR radiotherapy dose-fractionation guidelines (2006) (18)
- BC Cancer Agency musculoskeletal and sarcoma management guidelines (2011) (482)

The guidelines recommend primary radiotherapy for unresectable Ewing's sarcoma (487, 489), and adjuvant radiotherapy for involved surgical margins (18, 487, 489). Radiotherapy plays a limited role in the management of osteosarcoma and chondrosarcoma. For the purposes of the model, it was estimated that the optimal number of radiotherapy fractions for patients with bone sarcoma would be 0. It is acknowledged that this would slightly underestimate the optimal number of radiotherapy fractions for cancer patients, but the impact would likely be very small due to the small proportion of bone sarcoma patients in whom radiotherapy is indicated and the low incidence of bone sarcoma.

Chapter 17 Other Cancers

Other Cancers

This study involved estimating the optimal number of radiotherapy fractions in patients with a notifiable cancer with an incidence of ≥ 1% of the Australian cancer population. The remaining cancers with an incidence of < 1% were grouped under “other cancers” in the optimal radiotherapy fractionation model. These cancers accounted for 1% of all cancers occurring in Australia in 2005 (16), and included uncommon cancers such as cancer of the peritoneum and retroperitoneum, and cancer of the eye.

Radiotherapy has a relatively limited role in these cancers. Therefore, for the purposes of the model, it was estimated that the optimal number of radiotherapy fractions for these miscellaneous cancers would be 0.

Chapter 18 Palliative Radiotherapy For Brain and Bone Metastases

Metastatic spread to the brain and or bone is common for a number of cancer types. In the optimal radiotherapy fractionation model, palliative radiotherapy for brain metastases and bone metastases was recommended for the following primary cancer sites:

- Bladder cancer
- Breast cancer
- Cervical cancer
- Colon cancer
- Endometrial cancer
- Gastric cancer
- Lung cancer
- Melanoma
- Oesophageal cancer
- Ovarian cancer
- Prostate cancer (bone metastases only)
- Rectal cancer
- Renal cancer
- Testicular cancer
- Thyroid cancer
- Unknown primary cancer
- Vaginal cancer

The RCR dose-fractionation guidelines (18) specifically discuss the management of brain metastases and bone metastases.

Brain metastases

The RCR dose-fractionation guidelines (18) recommend the dose fractionation schedules of 20 Gy in 5 fractions and 30 Gy in 10 fractions. The guidelines state that most randomised studies that compared different radiotherapy regimens for patients with multiple brain metastases have used 30 Gy in 10 fractions as the control arm and compared this dose fractionation schedule to either higher or lower doses (490-495). One study compared the 6-month survival rate in

patients who received 30 Gy in 10 fractions to those who received 20 Gy in 5 fractions and showed no significant survival difference (490). The guidelines also make reference to the RTOG randomised studies in which dose fractionation schedules ranging from 10 Gy in 1 fraction to 40 Gy in 20 fractions were evaluated (496-497). There was no statistically significant difference in median survival, but the trial results suggested that regimens using only 1 or 2 fractions were inferior to 30 Gy in 10 fractions in terms of neurological function and symptoms.

In this model, the dose fractionation schedule, 20 Gy in 5 fractions, was used, based on clinical guideline recommendation and randomised controlled trial evidence. For each of the primary cancer sites for which palliative radiotherapy for brain metastases was recommended, a sensitivity analysis was performed to assess the impact of the range of number of fractions (5 to 10 fractions) on the average number of fractions per patient of that cancer site.

Bone metastases

The RCR guidelines (18) recommend 8 Gy in 1 fraction for uncomplicated bone pain, based on results from three systematic reviews (498-500). For neuropathic pain, the guidelines also recommend 8 Gy in 1 fraction, as a randomised controlled study which compared 8 Gy in 1 fraction to 20 Gy in 5 fractions has shown no significant benefit with the longer dose fractionation schedule (501). The guidelines recommend 20 Gy in 5 fractions and 8 Gy in 1 fraction for bone metastases with a high risk of pathological fracture, for inoperable pathological fractures, and for post-operative treatment after internal fixation of a fracture or prophylactic pinning.

For patients with spinal cord compression and paraplegia for less than 24 hours, the guidelines recommend 20 Gy in 5 fractions and 30 Gy in 10 fractions, making reference to the study reported by Rades et al (502) which compared 8 Gy in 1 fraction, 20 Gy in 5 fractions, 30 Gy in 10 fractions, 37.5 Gy in 15 fractions and 40 Gy in 20 fractions. This study showed no significant difference in functional outcome among the different dose fractionation schedules, but

showed lower rates of in-field recurrences with 30 Gy in 10 fractions, 37.5 Gy in 15 fractions and 40 Gy in 20 fractions, compared to the shorter dose fractionation schedules. The guidelines state that for patients with established paraplegia for more than 24 hours, a single dose of 8 Gy is acceptable.

In this model, the dose fractionation schedule, 8 Gy in 1 fraction, was used for patients with bone metastases. Since spinal cord compression only occurs in a small proportion of patients with bone pain requiring radiotherapy, and that the majority of these patients are of poor performance status, for each of the primary cancer site for which palliative radiotherapy for bone metastases was recommended, a sensitivity analysis was performed to assess the impact of the range of number of fractions (1 to 5 fractions, instead of 1 to 10 fractions) on the average number of fractions per patient of that cancer site.

Chapter 19 Results and Sensitivity Analyses

The optimal radiotherapy fractionation model was constructed for all notifiable cancers with an incidence of ≥ 1% in the Australian population. There were 15 cancer sites with 32 cancer sub-sites. This expands the scope of the optimal radiotherapy utilisation model (1-2) which reported on the treatment indications for 27 cancer sub-sites. Five additional cancer sub-sites were added to improve the precision of the estimate of optimal fractionation. They were small intestinal cancer, anal cancer, mesothelioma, soft tissue sarcoma and bone sarcoma. Small intestinal cancer and anal cancer, together with other cancers of the gastrointestinal tract, constituted the “gastrointestinal cancer” group, which accounted for 21% of all cancers in Australia. Mesothelioma was grouped together with lung cancer under “thoracic cancer” which accounted for 10% of all cancers in Australia. Soft tissue sarcoma and bone sarcoma were grouped under the cancer site of “sarcoma”, which accounted for 1% of all cancers in Australia. In total, 517 branches were constructed in the model.

It was estimated that, based on best available evidence, 50% of all cancer patients should ideally receive radiotherapy at least once during the course of their illness. The optimal radiotherapy utilisation rate has changed slightly from the original figure of 52.3%, as estimated in the optimal radiotherapy utilisation model constructed by Delaney et al (1-2), due to the addition of 5 cancer sub-sites, and changes in the distribution of cancer sub-sites, stage data and radiotherapy indications since the initial model was developed in 2003.

The optimal number of fractions for the first course of radiotherapy was calculated to be 9 per cancer patient and 18 per treatment course. For each cancer sub-site, the optimal number of fractions ranged from 0 to 26.1 per cancer patient, with the highest being anal cancer. The optimal number of fractions ranged from 0 to 30.8 per treatment course, with the highest being head and neck and CNS cancers. Table 1 summarises the results for each of the cancer sub-sites.

Table 1. Optimal number of radiotherapy fractions by cancer sub-site

Cancer site	Cancer sub-site	Proportion of all cancers (%)	Optimal radiotherapy utilisation (%)	Optimal no. of fractions per patient	Range of no. of fractions per patient	Optimal no. of fractions per treatment course
Genitourinary cancer		22	55	10.8	9.1-13.5	19.6
	Prostate	16	60	13.3	11-16.8	22.2
	Kidney	2	25	0.5	0.5-1.2	2
	Bladder	2	58	5.5	3.5-8.4	9.5
	Testis	1	29	3.3	1.2-5.4	11.4
Gastrointestinal cancer		21	34	5.7	4.7-7.6	16.8
	Colon	9	14	2.5	0.1-5.1	17.9
	Rectum	5	59	6.3	6.3-15.2	10.7
	Pancreas	2	50	10.8	10.8-12.6	21.6
	Stomach	2	34	8.5	0-17	25.0
	Oesophagus	1	82	13.4	12.3-17	16.3
	Liver	1	0	0	N/A	0
	Gallbladder	1	13	3.2	0.4-5.3	24.6
	Small intestine	0.4	0	0	N/A	0

	Anus	0.3	100	26.1	25-27.1	26.1
Breast		12	83	14.4	14.4-18.5	17.3
Melanoma		11	22	4.2	2.9-5.5	19.1
Thoracic cancer		10	72	12.1	11.2-13.8	16.8
	Lung	9	77	12.8	11.9-14.7	16.6
	Mesothelioma	1	0	0	N/A	0
Lymphoma		4	65	9.4	9.4-10.9	14.5
Gynaecological cancer		4	35	6.9	5.7-8	19.7
	Cervix	1	58	11.5	9.8-13.3	19.8
	Endometrium	2	42	8.5	5.7-11.2	20.2
	Ovary	1	4	0.3	0.3-0.4	7.5
	Vulva	0.3	34	8.6	8.2-10.2	25.3
	Vagina	0.1	94	21.7	21.4-23.4	23.1
Unknown primary		3	61	0.9	0.8-3.4	1.5
Head and neck		3	74	22.8	22-25.6	30.8
Leukaemia		3	4	0.3	0.3-0.3	7.5
Thyroid		2	10	2.0	2-4.3	20
CNS		2	79	23.1	23.1-24.7	30.8
Myeloma		1	46	2.1	1.6-3	4.6

Sarcoma		1	73	15.4	15.4-20	21.1
	Soft tissue sarcoma	0.5	100	21.2	21.2-27.9	21.2
	Bone sarcoma	0.2	0	0	N/A	0
Other cancer		1	0	0	N/A	0
Total		100	50	9	8.6-9.6	18

Further analysis was performed to determine the proportion of patients recommended to have radical versus palliative radiotherapy. For the first course of radiotherapy, 78% of patients would ideally be treated with radical intent and 22% with palliative intent. The original radiotherapy utilisation model was previously adapted to estimate the proportion of patients who should be treated with radical versus palliative intent, and according to that model, it was estimated that for the first course of radiotherapy, 86% of patients would ideally be treated with radical intent and 14% with palliative intent (503). The current estimates have changed from the previous estimates primarily due to branches which were added to the optimal radiotherapy fractionation model to improve the precision of the estimate of optimal fractionation. As an example, in the previous model, all patients with non-metastatic oesophageal cancer who did not have surgery were depicted having radical chemoradiotherapy. In the current model, additional epidemiological data were sourced to determine the proportion of patients who would be unfit for chemotherapy, and the branch of patients with non-metastatic oesophageal cancer who did not have surgery was split into two branches: those fit for chemotherapy and recommended to have radical chemoradiotherapy and those unfit for chemotherapy and recommended to have palliative radiotherapy. For radical radiotherapy, the optimal number of fractions was 22.3 per treatment course. For palliative radiotherapy, the optimal number of fractions was 3.3 per treatment course.

Sensitivity Analysis

As discussed in the chapters on individual cancer sub-sites, there were variables for which there was uncertainty. These variables were due to uncertainty in epidemiological data because of different proportions reported in the literature, uncertainty in the indication for radiotherapy as a result of conflicts in radiotherapy recommendations between treatment guidelines, uncertainty in the choice between radiotherapy and alternative treatments of equal efficacy, and uncertainty in the number of radiotherapy fractions due to different dose fractionation schedules recommended in the clinical practice guidelines. In total, there were 185 variables in the model (see Appendix 1).

i. Tornado analysis (one-way sensitivity analysis)

One-way sensitivity analysis allowed an assessment to be made of the impact of varying a single uncertain variable on the overall optimal number of radiotherapy fractions. This was done by setting upper and lower data limits and modelling the radiotherapy fractionation tree using these extreme values. Despite uncertainty in a large number of variables, one-way sensitivity analysis showed that the optimal number of fractions only varied from 8.6 to 9.6 per cancer patient. This tight range demonstrated the robustness of the model as the overall impact that any one of these data uncertainties had on the overall optimal number of fractions was minor.

With an optimal radiotherapy utilisation rate of 50%, this translated to an optimal fraction number of 17.2 to 19.2 per treatment course. For radical radiotherapy, the optimal fraction number ranged from 21.3 to 23.8 per treatment course. For palliative radiotherapy, the optimal fraction number ranged from 3.3 to 5.4 per treatment course.

ii. Monte Carlo analysis (multi-way sensitivity analysis)

Monte Carlo simulations were performed to assess the impact of data uncertainties on the overall optimal number of radiotherapy fractions in a multivariate fashion. Monte Carlo simulations are based upon the random sampling of variables from discrete and continuous distributions using individual trial data. The Monte Carlo analysis performed in this study involved 10000 simulations. The number of simulations chosen was arbitrary. These simulations resulted in an optimal number of radiotherapy fractions of 9, with the 95% confidence limits being 8.8 and 9.2. The tightness of the confidence intervals demonstrated that the overall estimate was robust. This final estimate was remarkably precise despite a large number of data uncertainties.

Summary of Results

The overall estimate for the optimal number of radiotherapy fractions for the first course of radiotherapy was 9 per cancer patient based upon the best available evidence. Univariate analysis showed that this might vary between 8.6 and 9.6 due to data uncertainties. Multivariate analysis using Monte Carlo simulations showed that the optimal number of radiotherapy fractions was 9, with 95% confidence limits of 8.8 and 9.2. Sensitivity analysis demonstrated that the estimate and the overall model were robust despite multiple data uncertainties.

Chapter 20 Discussion

Based on best evidence, this model estimates that the optimal number of fractions for the first course of radiotherapy is 9 per cancer patient and 18 per treatment course. This is the first model to estimate the optimal number of radiotherapy fractions for cancer patients based solely on the evidence. Despite multiple variables in the model, sensitivity analysis shows a very small range of number of fractions (8.6 to 9.6 per cancer patient based on one-way analysis and 8.8 to 9.2 based on multi-way analysis) suggesting the robustness of the model. However, it is acknowledged that this model has a number of limitations which are discussed below.

Limitations of the Optimal Radiotherapy Fractionation Model

1. The model included only the first course of radiotherapy.

This study only considered the first course of radiotherapy, and did not include retreatment after an initial course of either radical or palliative radiotherapy. Workload for retreatment courses needs to be accounted for when this model is applied to the planning of radiotherapy services. We have developed a solution for this limitation which is discussed below. Future study incorporating patterns of relapse data over time into this model to estimate the optimal number of fractions for both first courses as well as retreatment courses would be helpful to more accurately predict radiotherapy demand. This is a complex process that requires additional epidemiological data not currently available from the literature. The modelling needs to include data on the natural history and frequency of the development of symptoms with an indication for radiotherapy (e.g., painful metastases), the time course between episodes and the overall history of the disease. Our research team are currently attempting to address these issues in an additional body of work.

2. The model included only notifiable cancers in Australia.

Non-melanomatous skin cancers and benign tumours are not notifiable in Australia and hence were not included in the model. Radiotherapy has an established role in the treatment of non-melanomatous skin cancers and benign

tumours such as pituitary adenoma and meningioma. Furthermore, radiotherapy is used to treat benign conditions such as keloid and heterotopic ossification. It is difficult to estimate the optimal number of fractions for these non-notifiable conditions as the incidence of these conditions is unknown. Additional workload for these conditions again needs to be considered when this model is used to aid in the planning of radiotherapy services. Non-melanomatous skin cancers are prevalent in Australia. Treatment for these cancers represents a moderate workload in radiotherapy centres in Australia. We have developed a solution for estimating the radiotherapy workload for non-melanomatous skin cancers which is discussed below.

3. Quality of data

There was a lack of high quality epidemiological data for some clinical situations in the model, particularly performance status and co-morbidity data. For example, a significant proportion of patients with stage II-III bladder cancer will not be fit to undergo a radical course of radiotherapy due to poor performance status or co-morbidities, however, performance status and co-morbidity data of these patients could not be obtained despite an extensive literature search. In the model, data of actual practice in Australia were used instead to estimate the proportion of patients who should receive radical versus palliative radiotherapy. Because the lack of high quality epidemiological data applied mainly to the terminal branches of the model, the impact on the overall optimal number of fractions was small. Furthermore, sensitivity analysis was performed for those branches where high quality epidemiological data were lacking and showed that the impact of these uncertainties on the overall optimal estimate was minor.

4. Variations in recommendation on radiotherapy indication and dose fractionation schedule

On review of the clinical guidelines, it has been identified that there are differing recommendations on radiotherapy indication (e.g., pre-operative chemoradiotherapy for oesophageal cancer) and dose fractionation schedule (e.g., resectable high risk rectal cancer) for many clinical situations. There are

also clinical situations where the indications for the use of radiotherapy are poorly defined. For example, while most of the clinical guidelines discuss the role of tumour bed boost in breast cancer patients after breast-conserving surgery, there is no consensus in the guidelines regarding the indications for when a tumour bed boost should be recommended and nor for the recommended dose and fractionation scheme. Furthermore, there are some clinical situations with widely disparate treatment options, one of which could be radiotherapy (e.g., early prostate cancer). We have attempted to estimate the effect of these variations by performing sensitivity analysis for each of these variables. That showed that the variables had a minor impact on the overall optimal number of fractions. The model can also be easily modified to incorporate changes in any of these recommendations in the future.

Potential Uses of the Optimal Radiotherapy Fractionation Model

The optimal fractionation model has the following current and future applications.

1. Planning of radiotherapy services on a population basis

The model provides a benchmark for radiotherapy services planning. Results of this study can be applied to aid in the planning of radiotherapy services for a given population. If the population characteristics are similar to those that appear in this analysis then the radiotherapy resource requirements can be calculated using the calculations shown below. If the tumour type distributions differ from that described here, then those data can be inserted into the model to calculate the local radiotherapy service requirements for a particular distribution.

For those jurisdictions with similar case distributions to those described in this study the following may be calculated. For every 1000 new cases of notifiable cancer in a population, 500 patients would need radiotherapy as an optimal part of their management based on the optimal radiotherapy utilisation rate of 50%. As mentioned above, a limitation of this study is that the model includes only the

first course of treatment. Since retreatment is outside of the scope of this study, actual retreatment data are used to estimate the number of fractions required for the population. Based upon an actual retreatment rate of 26% (11), a further 130 patients will require retreatment. It is estimated that, in total, 630 courses of radiotherapy will be required for every 1000 new cancer patients diagnosed with a notifiable cancer. Based on the evidence-based estimate of 18 fractions per radiotherapy course for first treatment, 9000 radiotherapy fractions should be delivered for the first course of treatment. Since the vast majority of retreatment is delivered with palliative intent, by applying the optimal number of fractions per palliative course (3.3 fractions per course), a further 429 fractions should be delivered for retreatment. It is therefore estimated that 9429 fractions and 630 treatment courses will be required for every 1000 new cancer cases in a population, with the average number of fractions being 15 fractions per course.

Planning parameters for linear accelerator capacity of the particular population can then be applied to aid in planning of radiotherapy services to ensure adequate access by cancer patients. For example, for the planning of radiotherapy services in NSW, the ROJIG planning parameters for linear accelerator capacity are used (9). These include 4.1 attendances per hour, 8 operating hours per day and 240 working days per annum. Using these parameters, the maximum capacity for a linear accelerator is 7872 radiotherapy fractions per year. It follows that 1.2 linear accelerators will be required to treat every 1000 new cancer patients with a notifiable cancer. These calculations are summarised in table 1.

Morgan et al (4) estimated the number of linear accelerators required in Australia and New Zealand in 2009 to achieve a 52.3% radiotherapy utilisation rate based on the original radiotherapy utilisation model estimate (1-2). Using the ROJIG planning parameter of 25% retreatment rate (9), they estimated that 654 courses of radiotherapy (523 first treatment courses and 131 retreatment courses) will be required for every 1000 new cancer cases. This was very similar to our estimate of 630 radiotherapy courses per 1000 new cancer patients, however, they estimated that 1.6 linear accelerators would be required for every 1000 new cancer patients, compared to our estimate of 1.2 linear

accelerators. The reason for the difference is that, in their study, their calculations were based on the ROJIG planning parameter of 19 fractions per treatment course which reflected actual practice, whereas our calculations were based on the optimal number of fractions per radiotherapy course based on best available evidence (15 fractions per treatment course).

Table 1. Estimated optimal number of radiotherapy fractions and number of linear accelerators per 1000 new cancer cases

	Number
New cancer cases	1000
Number of first radiotherapy courses	1000x0.5=500
Number of fractions for first course of radiotherapy	500x18=9000
Number of retreatment courses	500x0.26=130
Number of fractions for retreatment	130x3.3=429
Total number of fractions	9000+429=9429
Number of linear accelerators required	9429/(4.1x8x240)=1.2

It is acknowledged that there is variation in linear accelerator capacity in different populations. For example, in NSW in 2010, the average number of fractions delivered per linear accelerator was 6949 (11), compared to 9261 in Scotland in 2003 (7), which was significantly higher than the linear accelerator capacity according to the ROJIG planning parameters. Also, the linear accelerator capacity will likely change with time due to the increasing complexity of treatment such as intensity-modulated radiotherapy, image-guided radiotherapy, stereotactic radiotherapy and 4-dimensional radiotherapy, as the additional complexity increases the required machine time per fraction due to additional quality assurance processes. As an example, Mou et al (504) reported on the changes in workload and treatment complexity in CancerCare Manitoba, a cancer centre in Canada, between 2000 and 2009. They found that the number of treatment portals used per radiotherapy course increased steadily from 2005 to 2008, but since then, there has been a much steeper rise

in treatment portals per treatment course, coincident with the implementation of intensity-modulated radiotherapy.

Non-melanomatous skin cancers are not notifiable in Australia and hence were not included in the model. As radiotherapy has an established role in the treatment of non-melanomatous skin cancers, additional workload needs to be considered when this model is used to aid in the planning of radiotherapy services, particularly in countries such as Australia where non-melanomatous skin cancers are prevalent. As estimation of the optimal number of radiotherapy fractions for non-melanomatous skin cancers is outside of the scope of this study, current actual practice is used as a guide to estimate the additional radiotherapy workload.

In Australia, it was estimated that approximately 374000 new cases of basal cell carcinoma and squamous cell carcinoma were diagnosed in 2002 (16). The William Buckland Cancer Centre, Victoria, reported on the case mix and outcomes of patients treated with radiotherapy between 1992 and 2002. In addition to the 9143 patients who received radiotherapy for notifiable cancers, 695 patients (8%) received radiotherapy for skin cancers (505). An analysis of cases treated at the Queensland Radium Institute between 1992 and 1997 showed that 14780 patients were treated with radiotherapy for notifiable cancers and an additional 871 patients (6%) were treated with radiotherapy for skin cancers (506). Based on these departmental data, skin cancer treatment accounted for an additional 7% (weighted mean) workload to that for notifiable cancers.

A wide range of dose fractionation schedules are recommended in the guidelines. The Cancer Council Australia and Australian Cancer Network guidelines on basal cell carcinoma and squamous cell carcinoma (507) state that standard curative treatment of small lesions (< 2 cm) usually requires attendances over one to two weeks, compared to 15 to 30 fractions over 3 to 6 weeks for larger lesions. The NCCN guidelines for basal cell and squamous cell skin cancers (508) recommend the following dose fractionation schedules for the primary tumour: 64 Gy in 32 fractions, 55 Gy in 20 fractions, 50 Gy in 15

fractions and 35 Gy in 5 fractions for lesions < 2cm, and 66 Gy in 33 fractions and 55 Gy in 20 fractions for lesions ≥ 2 cm. For adjuvant treatment, the guidelines recommend 60 Gy in 30 fractions and 50 Gy in 20 fractions. For squamous cell carcinoma with regional disease, the guidelines recommend 50 to 70 Gy in 25 to 35 fractions, depending on the clinical situation. No specific dose fractionation schedules are recommended by the BC Cancer Agency guidelines on skin cancer (224), but these guidelines state that under normal circumstances patients receive a one-week course of radiotherapy for small lesions (< 4 cm) and a two-week course or longer for larger lesions.

Patterns of care studies showed a wide range of dose fractionation schedules used in actual practice. Thom et al (509) retrospectively reviewed the patients who were treated with superficial radiotherapy at Fremantle Hospital, Perth, between 1999 and 2001. Of the 327 cases of basal cell carcinoma and squamous cell carcinoma treated, the most commonly used dose fractionation schedule was 36 Gy in 6 fractions (77% of cases), followed by 50 Gy in 20 fractions (6%) and 45 Gy in 15 fractions (5%). While the sizes of the lesions were not reported, the median treatment field size was 3 cm, indicating that the majority of lesions treated were small. Silva et al (510) reported on 313 patients with 334 skin cancers of the pinna treated at the Princess Margaret Hospital, Canada. The median tumour size was 1.5 cm. The most frequently used dose fractionation schedules were 35 Gy in 5 fractions (37%) and 42.5 to 45 Gy in 10 fractions (20%).

No population-based data on the actual number of fractions per treatment course for skin cancer from Australia were identified despite an extensive literature search. The only population-based data identified were of Sweden which showed that in 2001, the average number of fractions per treatment course for skin cancer was 15.7 (511). Based on Australian departmental data that treatment for skin cancer accounted for an additional 7% of radiotherapy workload to that for notifiable cancers, and assuming that the radiotherapy prescription pattern for skin cancer in Australia is similar to that of Sweden, then it can be estimated that for every 1000 new cases of notifiable cancers in Australia, 44 cases of skin cancer will be treated and 691 fractions will be

prescribed. The calculations are summarised in table 2. As a proportion of skin cancer treatments are delivered with orthovoltage radiotherapy, the estimated radiotherapy workload for skin cancer will be useful for planning of linear accelerator and orthovoltage radiotherapy machine requirements.

Table 2. Estimated number of radiotherapy fractions for skin cancer based on actual practice per 1000 new notifiable cancer cases

	Number
New notifiable cancer cases	1000
Number of first radiotherapy courses	1000x0.5=500
Number of retreatment courses	500x0.26=130
Total number of courses for notifiable cancers	500+130=630
Number of courses for skin cancers	630x0.07=44
Number of fractions for skin cancers	44x15.7=691

2. Predicting future radiotherapy workload to aid in future planning of radiotherapy services

The incidence of cancer continues to increase as a result of population growth and ageing of the population. Data from Cancer Institute NSW showed that new cases of cancer in NSW are increasing on average by 5000 every 5 years (512). There were 35342 new cases of cancer in 2006 and it is projected that there will be 51027 new cases in 2021. Using the estimation that 1.2 linear accelerators are required per 1000 new cases of cancer, 6 new linear accelerators need to be installed every 5 years just to keep up with the increasing demand due to increasing cancer incidence.

3. Comparison with actual fractionation practice

The model provides a benchmark for service delivery and allows comparison with actual practice from population-based patterns of care studies. Table 3

shows the actual radiotherapy fractionation numbers from population-based reports from Canada, France, Sweden, Scotland, the UK and Australia.

Table 3. Comparison of optimal with actual number of fractions

Treatment	**Optimal no. of fractions per treatment course (range)**	**Actual no. of fractions per treatment course**						
		Ontario, Canada 1996-1997 (513)	France 1999 (514)	Sweden 2001 (511)	Scotland 2003 (7-8)	UK 2005 (12)	UK 2007 (13)	NSW, Australia 2010 (11)
First course	18.0 (17.2-19.2)						15.4	
All (first course and retreatment)	15 (14.3-16.4)	15.3	20	14.6	13.7	13.1	13.4	18.6
Radical	22.3 (21.3-23.8)	24.9		23.9	24	20.4	20.6	
Palliative	3.3 (3.3-5.4)	5.8		7.0	7 (primary tumour) 4 (metastasis)	5.0	4.0	

There is variation in current radiotherapy fractionation practices. Population-based studies showed that the average number of fractions per treatment course varied between 13.1 and 20 (7-8, 11-13, 511, 513-514). These studies reported the number of fractions for all treatment courses, i.e. both first course of treatment and retreatment, except the 2007 patterns of care study of the UK which also reported the number of fractions for first courses only (13).

The optimal fractionation model provides an estimate of the optimal average number of fractions per first course of radiotherapy. Most retreatment courses are delivered in short dose fractionation schedules with palliative intent. As discussed above in the planning of radiotherapy services on a population basis, it is estimated that the “optimal” number of fractions is 15 per treatment course, when both first courses and retreatment courses are considered. By further applying the range of optimal number of fractions per treatment course (17.2 to 19.2 fractions per first course and 3.3 to 5.4 fractions per retreatment course), the optimal number of fractions per treatment course overall is estimated to range from 14.3 to 16.4. We believe these estimates provide a reasonable benchmark for comparison with population-based actual fractionation data which include both first courses and retreatment courses, acknowledging the limitations that in the calculations of these estimates, actual retreatment rate has been used and the optimal number of fractions per palliative course has been applied to patients undergoing retreatment.

Comparison with population-based data shows that the actual number of fractions per treatment course in Ontario, Sweden, Scotland and the UK overall was close to the evidence-based estimate, whereas it was higher than optimal in France and NSW (7-8, 11-13, 511, 513-514). The average number of fractions per radical course in Ontario, Sweden, Scotland and the UK also approximated the optimal estimate, however the average number of fractions per palliative course was higher than optimal in Sweden. The higher than optimal number of fractions per palliative course suggests that longer dose fractionation schedules were delivered in the palliative setting compared to the evidence-based schedules used in the model. A detailed analysis of actual radiotherapy prescriptions is outside of the scope of this thesis, but as an

example, review of the population-based data of Sweden (511) showed that for treatment of bone metastases, the average number of fractions was 4.4 per treatment course, when a single fraction (modelled up to 5 fractions) was recommended for patients with bone metastases in the model (see chapter 18). In the Swedish study (511), 1144 patients received radiotherapy for bone metastases in the study period. Dose fractionation schedules of 995 patients were reported, of which 223 (22.4%) received 6 to 7 fractions or 10 fractions.

The 2007 patterns of care study of the UK (13) showed that, for the first course of radiotherapy, the average number of fractions per treatment course was 15.4. While this fell short of the optimal estimate, the average number of fractions per radical course and that per palliative course approximated the optimal estimates, suggesting that a higher than optimal proportion of patients were treated with palliative intent. It is likely that in actual practice, patients are missing out on radical radiotherapy when it is indicated, and when they eventually receive radiotherapy it is with palliative intent when the cancer has progressed or relapsed. Possible explanations why patients are not receiving radical radiotherapy as their first treatment include lack of access to radiotherapy treatment facilities, inadequate referral for appropriate radiotherapy, patient or physician concern regarding radiotherapy toxicity, and refusal of treatment by the patient. Studies have shown that actual radiotherapy utilisation rates for most cancer types fall short of the optimal radiotherapy utilisation rates, which support our postulation that patients are not receiving radiotherapy at the time of first treatment when they should be (2, 27, 99, 198, 225, 245, 271, 349, 366).

It is also possible that the model might have underestimated the proportion of patients with poor performance status who would be unfit for radical radiotherapy as high quality performance status and co-morbidity data in the literature are lacking. Available data were incorporated into the optimal fractionation model whenever possible. It is likely this will only have a minor effect on the optimal proportion of patients who should receive palliative radiotherapy.

In 2010, the average number of fractions per treatment course in NSW was 18.6, which was significantly higher than our optimal estimate of 15. Furthermore, there was significant variation amongst the 17 Radiation Oncology departments, with the average number of fractions varying between 15.3 and 23.7. Further research to investigate the reasons for the difference from the optimal estimate, and the wide variation in actual practice is warranted. Significant variation in fractionation practices also exists in other populations. An audit of radiotherapy activity in Scotland in 2003 showed that the average number of fractions per treatment course varied between 11.7 and 17.3 amongst the 5 Radiation Oncology departments. In the UK in 2007, the average number of fractions per treatment course varied from the lowest of 13.0 in England to the highest of 17.8 in Ireland (13). Amongst the 10 geographical regions in England, the average number of fractions per treatment course varied between 11.6 and 15.1. Geographical variations, to an extent, are reasonable, given the differences in case mix due to regional differences in epidemiological factors such as socioeconomic status. For example, Williams and Drinkwater (13) found that the most deprived regions in England had the lowest values for radical courses and radical fractions per incident cancer, which likely reflected late presentation with advanced disease, poor performance status and presence of co-morbid illness.

4. Modelling the effect of changes in cancer incidence, stage distribution, indication for radiotherapy and dose fractionation schedule on the optimal number of fractions

The TreeAge software used to construct the model can be readily used to change the overall model should there be changes in cancer incidence, stage distribution, radiotherapy indication and dose fractionation schedule. Results of clinical trials which have recently completed recruitment or are currently recruiting can be easily incorporated into the model to assess the impact on the optimal number of fractions. For example, for the rectal cancer tree, the dose fractionation schedule, 25 Gy in 5 fractions, was used for patients with clinically resectable high risk rectal cancer, with a sensitivity analysis performed to assess the impact of the range of number of fractions (5 to 28 fractions), since

both short-course radiotherapy (25 Gy in 5 fractions) and long-course chemoradiotherapy (45 to 50.4 Gy in 25 to 28 fractions) are recommended in the clinical guidelines. The TROG 01.04 study, a randomised trial comparing long-course chemoradiotherapy (50.4 Gy in 28 fractions) with short-course radiotherapy alone (25 Gy in 5 fractions) for clinically resectable T3 rectal cancer, was closed to accrual in 2006 and results are awaited. If this trial shows that long-course chemoradiotherapy is superior to short course radiotherapy, and the dose fractionation schedule 50.4 Gy in 28 fractions is used instead in the model, the optimal number of fractions for the first course of radiotherapy per rectal cancer patient would increase from 6.3 to 15.2, and the overall optimal number of fractions for the first course of radiotherapy per cancer patient would change from 9 to 9.4.

Another example is the use of stereotactic radiotherapy for patients with early stage NSCLC. The NCCN guidelines (240) state that stereotactic radiotherapy can be considered for inoperable stage I patients with peripheral lesions that are less than 5 cm in maximal dimension. Currently, there is no high level supportive evidence for this treatment, with the best evidence being small phase II studies which showed high local control rates and favourable overall survival rates, comparable to surgery and higher than standard conformal radiotherapy (515-518). Stereotactic radiotherapy for stage I NSCLC is considered investigational in Australia and is currently the subject of a TROG study (CHISEL: A randomised phase III trial of highly conformal hypofractionated image guided ("stereotactic") radiotherapy versus conventionally fractionated radiotherapy for inoperable early stage I non-small cell lung cancer). If studies show that stereotactic radiotherapy is superior, and this treatment becomes standard practice, then patients will be treated with 3 fractions instead of 30 to 36 fractions of conventionally fractionated radiotherapy.

Chapter 21 Conclusions

Based on best available evidence, it is estimated that 50% of all cancer patients should ideally receive radiotherapy at least once during the course of their illness, and that the optimal number of fractions for the first course of radiotherapy is 9 per cancer patient and 18 per treatment course. One-way and Monte Carlo sensitivity analyses show these estimates to be robust despite multiple variables in the model. The 95% confidence limits for the optimal number of fractions per cancer patient using Monte Carlo analysis were 8.8 and 9.2. These data serve as a benchmark for comparison with actual practice, and will be helpful in the planning of radiotherapy services. Further research in the optimal number of fractions for non-melanomatous skin cancer and benign conditions in which radiotherapy plays a role will complement these data to better predict radiotherapy workload.

Appendix 1 Variables in the Model

There were 185 variables on which sensitivity analysis was performed in the model. These variables were due to:

i. uncertainty in epidemiological data because of different proportions reported in the literature
ii. uncertainty in the indication for radiotherapy as a result of conflicts in radiotherapy recommendations between treatment guidelines
iii. uncertainty in the choice between radiotherapy and alternative treatments of equal efficacy
iv. uncertainty in the number of radiotherapy fractions due to different dose fractionation schedules recommended in the clinical practice guidelines

These variables are listed in the left column in the tables below, with the range of values applied in the sensitivity analysis listed in the middle column and the impact on the optimal number of fractions per cancer patient listed in the right column. The variables are arranged so that those with the most impact appear at the top of the tables and those with smaller impact appearing below.

Table 1. Variables due to uncertainty in epidemiological data because of different proportions reported in the literature

Variable	Range of values applied in sensitivity analysis	Range of optimal number of fractions per cancer patient
Proportion of melanoma patients with brain or bone or nodal metastases	0.21-0.51	8.9-9.0
Proportion of prostate cancer patients treated by observation only who subsequently develop local recurrence	0.07-0.24	9.0-9.1
Proportion of papillary thyroid cancer patients with persistent local recurrence warranting radiotherapy	0.03-0.15	9.0-9.1
Proportion of stomach cancer M0 at diagnosis	0.62-0.83	9.0-9.0
Proportion of non-metastatic operable gallbladder cancer	0.43-0.97	9.0-9.0
Proportion of non-metastatic bladder cancer patients receiving radical radiotherapy	0.5-0.67	9.0-9.1
Proportion of non-metastatic stomach cancer patients who have T1N0 disease	0.06-0.2	9.0-9.0
Proportion of M0 oesophageal cancer patients that are considered operable	0.42-0.59	9.0-9.0
Proportion of myeloma patients who present with spinal cord compression	0.03-0.18	9.0-9.0
Proportion of prostate cancer patients with local recurrence after initial observation with local	0.72-1	9.0-9.0

disease only		
Proportion of operable oesophageal cancer patients who have resection with clear margins	0.54-0.7	9.0-9.0
Proportion of operable NSCLC patients with positive surgical margins	0.005-0.02	9.0-9.0
Proportion of metastatic renal cancer patients with brain metastases	0.07-0.19	9.0-9.0
Proportion of unknown primary cancer with bone metastases	0.13-0.45	9.0-9.0
Proportion of renal cancer patients that undergo nephrectomy and then develop distant metastases	0.23-0.58	9.0-9.0
Proportion of stage III-IV low grade NHL (non-MALT) patients with complete response post-chemotherapy	0.38-0.66	9.0-9.0
Proportion of extensive stage SCLC patients with local relapse following chemotherapy	0.43-0.61	9.0-9.0
Proportion of extensive stage SCLC patients with brain metastases	0.27-0.49	9.0-9.0
Proportion of patients with localised prostate cancer post-surgery who develop distant metastases	0.04-0.15	9.0-9.0
Proportion of MALT lymphoma patients with complete response to Helicobacter Pylori eradication	0.56-0.81	9.0-9.0
Proportion of stage IIIB-IV NSCLC patients with local symptoms where radiotherapy is warranted	0.56-0.71	9.0-9.0
Proportion of ALL patients < 15 years who relapse	0.12-0.37	9.0-9.0
Proportion of stage III NSCLC patients with local recurrence post-surgery	0.24-0.44	9.0-9.0
Proportion of breast cancer patients who undergo surgical excision of loco-regional	0.61-0.77	9.0-9.0

recurrence after initial mastectomy		
Proportion of metastatic bladder cancer patients with brain metastases	0.01-0.12	9.0-9.0
Proportion of papillary thyroid cancer patients with distant recurrence	0.04-0.11	9.0-9.0
Proportion of metastatic breast cancer patients with bone metastases	0.42-0.71	9.0-9.0
Proportion of metastatic bladder cancer patients with bone metastases	0.18-0.43	9.0-9.0
Proportion of vaginal cancer patients with local recurrence after initial surgery	0-0.29	9.0-9.0
Proportion of stage III NSCLC patients who develop distant recurrence post-surgery	0.32-0.59	9.0-9.0
Proportion of stage II-IV Hodgkin lymphoma patients < 60 years old	0.63-0.8	9.0-9.0
Proportion of metastatic oesophageal cancer patients with bone metastases	0.16-0.33	9.0-9.0
Proportion of non-metastatic oesophageal cancer patients that subsequently develop distant metastatic disease	0.18-0.3	9.0-9.0
Proportion of breast cancer patients with bone metastases and pain	0.80-0.95	9.0-9.0
Proportion of metastatic papillary thyroid cancer patients with bone metastases	0.19-0.3	9.0-9.0
Proportion of oesophageal cancer patients with involved margins post-resection	0.33-0.75	9.0-9.0

Table 2. Variables due to uncertainty in the indication for radiotherapy as a result of conflicts in radiotherapy recommendations between treatment guidelines

Variable	Range of values applied in sensitivity analysis	Range of optimal number of fractions per cancer patient
Whether adjuvant radiotherapy recommended for T4 colon cancer	0-0.25	8.8-9.3
Whether T2N0M0 prostate cancer patients with positive margins should receive radiotherapy	0-0.35	8.8-9.0
Proportion of breast cancer patients receiving tumour bed boost	0.47-1	9.0-9.2
When melanoma patients have sufficient nodal involvement to warrant adjuvant radiotherapy	0.26-0.55	9.0-9.2
Whether T1N0M0 prostate cancer patients with positive margins should receive radiotherapy	0-0.22	8.9-9.0
Whether patients with operable oesophageal cancer should receive pre-operative radiotherapy	0-1	9.0-9.1
Whether adjuvant radiotherapy is recommended for all pancreatic cancer	0-1	9.0-9.1
Proportion of post-mastectomy breast cancer patients with sufficient axillary nodal disease to recommend radiotherapy	0.18-0.34	9.0-9.1
Whether patients with unresectable M1 colon cancer should receive radiotherapy	0-0.11	9.0-9.0

The size criteria to estimate the proportion of lip cancers that are small enough to be operable with good cosmesis in preference to radiotherapy	0.75-0.94	9.0-9.0
Whether a proportion of patients with supraglottic cancer can undergo conservative surgery in preference to radiation	0-0.16	9.0-9.0
Whether palliative radiotherapy for a symptomatic primary renal cancer in the presence of M1 disease is warranted	0-0.2	9.0-9.0
The criteria to be used for head and neck cancer with unknown primary depending on the extent of nodal involvement	0.09-0.22	9.0-9.0
Whether radiotherapy is used for stage IIC-III seminoma patients with residual disease post-chemotherapy	0-0.15	9.0-9.0
Whether radiotherapy is used in testicular cancer patients with brain metastases at diagnosis	0-1	9.0-9.0
Whether radiotherapy is used for stage II seminoma patients with residual disease post-chemotherapy	0-0.07	9.0-9.0
Whether local recurrence after nephrectomy should receive radiotherapy	0-0.04	9.0-9.0

Table 3. Variables due to uncertainty in the choice between radiotherapy and alternative treatments of equal efficacy

Variable	Range of values applied in sensitivity analysis	Range of optimal number of fractions per cancer patient
Proportion of T2N0M0 prostate cancer patients undergoing surgery in preference to radiotherapy	0.1-0.7	8.8-9.6
Proportion of T1N0M0 prostate cancer patients undergoing surgery in preference to radiotherapy	0.1-0.7	8.9-9.3
Proportion of stomach cancer patients receiving post-operative chemoradiotherapy in preference to peri-operative chemotherapy	0-1	8.9-9.2
Proportion of endometrial cancer patients undergoing node dissection	0.1-0.9	9.0-9.1
Proportion of stage I-II oral cavity cancer patients undergoing surgery	0-0.9	9.0-9.1
Proportion of stage II-III bladder cancer patients undergoing surgery	0-0.47	9.0-9.0
Proportion of stage I seminoma patients having radiotherapy in preference to chemotherapy	0-0.89	9.0-9.0
Proportion of low grade glioma patients having radiotherapy	0.77-1	9.0-9.0
Proportion of early glottic cancer patients having laser therapy or conservative laryngeal	0-0.1	9.0-9.0

surgery in preference to radiotherapy		

Table 4. Variables due to uncertainty in the number of radiotherapy fractions due to different dose fractionation schedules recommended in the clinical practice guidelines

Variable	Range of values applied in sensitivity analysis	Range of optimal number of fractions per cancer patient
Radical radiotherapy for intermediate or high risk prostate cancer	16-44	8.6-9.2
Adjuvant radiotherapy to whole breast and tumour bed boost after breast conserving surgery	19-33	9.0-9.5
Radiotherapy for resectable high risk rectal cancer	5-28	9.0-9.4
Adjuvant radiotherapy to whole breast after breast conserving surgery	15-25	9.0-9.4
Radiotherapy for melanoma nodal recurrence	5-30	8.9-9.1
Radiotherapy for bone metastases	1-5	9.0-9.3
Radiotherapy for melanoma multiple nodal involvement	5-30	8.9-9.1
Radical radiotherapy for NSCLC	30-36	9.0-9.2
Radiotherapy for low risk prostate cancer	16-44	8.9-9.1
Radiotherapy for locoregionally advanced breast cancer	15-33	9.0-9.2
Radiotherapy for patients with limited stage SCLC	15-35	8.9-9.1

Radiotherapy for nodal metastases from an unknown primary cancer	1-10	9.0-9.1
Radical radiotherapy for bladder cancer	20-33	9.0-9.1
Radiotherapy for early stage intermediate grade NHL	15-20	9.0-9.1
Post-mastectomy radiotherapy	15-33	9.0-9.1
Radiotherapy for desmoplastic melanoma	5-30	9.0-9.0
Radiotherapy for brain metastases	5-10	9.0-9.1
Radiotherapy for pT4 melanoma	5-30	9.0-9.0
Radiotherapy for non-metastatic soft tissue sarcoma	25-33	9.0-9.1
Radiotherapy for stage I-II glottic cancer	16-35	9.0-9.0
Radiotherapy for local progression of early prostate cancer after initial observation	16-44	9.0-9.0
Radiotherapy for lip cancer	10-37	9.0-9.1
Radiotherapy for local relapse of NSCLC	5-13	9.0-9.1
Radical radiotherapy for unresectable pancreatic cancer	28-33	9.0-9.1
Prophylactic cranial irradiation for extensive stage SCLC	10-18	9.0-9.1
Radiotherapy for stage III-IV oropharyngeal cancer	33-68	9.0-9.1
Radiotherapy for GBM	30-33	9.0-9.1
Radiotherapy for unresectable high risk rectal cancer	25-30	9.0-9.1
Adjuvant radiotherapy post-prostatectomy	30-32	9.0-9.1
Radiotherapy for locally advanced cervical cancer	20-30	9.0-9.0
Radiotherapy for T4 colon cancer	25-28	9.0-9.1

Radiotherapy for stage III-IV oral cavity cancer	33-68	9.0-9.0
Radiotherapy for stage III-IV hypopharyngeal cancer	33-68	9.0-9.0
Adjuvant radiotherapy for gastric cancer	25-28	9.0-9.0
Palliative radiotherapy for oesophageal cancer	5-10	9.0-9.0
Radiotherapy for low grade NHL	12-18	9.0-9.0
Radiotherapy for stage I seminoma	8-20	9.0-9.0
Radiotherapy for metastatic soft tissue sarcoma	1-15	9.0-9.0
Radiotherapy for paranasal sinus cancer	33-68	9.0-9.0
Radiotherapy for stage III-IV glottic cancer	42-68	9.0-9.0
Radical radiotherapy for oesophageal cancer	25-28	9.0-9.0
Salvage radiotherapy post-prostatectomy	30-33	9.0-9.0
Adjuvant radiotherapy for endometrial cancer	23-28	9.0-9.0
Radiotherapy for progression of prostate cancer in patients with poor performance status	1-10	9.0-9.0
Adjuvant radiotherapy for oral cavity cancer	30-33	9.0-9.0
Radiotherapy for extensive stage SCLC	5-13	9.0-9.0
Radiotherapy for stage III-IV supraglottic cancer	33-68	9.0-9.0
Radiotherapy for early Hodgkin lymphoma	10-15	9.0-9.0
Radiotherapy for T3/4 or N+ anal cancer	28-32	9.0-9.0
Radiotherapy for stage IIB/III endometrial cancer	23-28	9.0-9.0
Radiotherapy for early stage mycosis fungoides	12-36	9.0-9.0

Radiotherapy for low grade astrocytoma	25-30	9.0-9.0
Radiotherapy for advanced stage mycosis fungoides	5-36	9.0-9.0
Radiotherapy for stage I-III papillary serous and clear cell carcinoma of the endometrium	23-28	9.0-9.0
Radiotherapy for T2N0M0 anal cancer	25-32	9.0-9.0
Radiotherapy for locally recurrent thyroid cancer	25-33	9.0-9.0
Adjuvant radiotherapy for pN2 NSCLC	25-33	9.0-9.0
Radiotherapy for advanced stage Hodgkin lymphoma	15-20	9.0-9.0
Adjuvant radiotherapy for stage IB/IIA cervix cancer	23-30	9.0-9.0
Radiotherapy for high risk vulvar cancer	23-36	9.0-9.0
Definitive radiotherapy for recurrent oral cavity cancer	33-68	9.0-9.0
Adjuvant radiotherapy for salivary gland cancer	30-33	9.0-9.0
Radiotherapy for stage IIA/B seminoma	15-25	9.0-9.0
Radiotherapy for intermediate risk vulvar cancer	23-33	9.0-9.0
Radiotherapy for DCIS recurrence after mastectomy (post-excision)	25-30	9.0-9.0
Radiotherapy for anaplastic astrocytoma	30-33	9.0-9.0
Radiotherapy for local recurrence of rectal cancer in presence of distant metastases	10-15	9.0-9.0
Radiotherapy for MALT lymphoma	12-15	9.0-9.0
Radiotherapy for low grade oligodendroglioma	25-30	9.0-9.0
Adjuvant radiotherapy for paranasal sinus cancer	30-33	9.0-9.0
Radiotherapy for ependymoma	28-33	9.0-9.0

Radiotherapy for local recurrence of endometrioid cancer	23-28	9.0-9.0
Radiotherapy for metastatic anal cancer	5-10	9.0-9.0
Radiotherapy for solitary plasmacytoma	20-25	9.0-9.0
Radiotherapy for DCIS recurrence after mastectomy (gross disease)	30-35	9.0-9.0
Chemoradiotherapy for oropharyngeal cancer	33-35	9.0-9.0
Radiotherapy for stage IV melanoma nodal metastases	15-20	9.0-9.0
Radiotherapy for unresectable gallbladder cancer	25-28	9.0-9.0
Adjuvant radiotherapy for glottic cancer	30-33	9.0-9.0
Radiotherapy for inoperable isolated local recurrence of rectal cancer	28-33	9.0-9.0
Radiotherapy for stage I-II supraglottic cancer	33-37	9.0-9.0
Radiotherapy for cancer of unknown primary of the head and neck	33-37	9.0-9.0
Adjuvant radiotherapy for NSCLC positive margins	27-33	9.0-9.0
Radiotherapy for operable isolated local recurrence of rectal cancer	25-30	9.0-9.0
Radiotherapy for local or regional recurrence of oesophageal cancer	25-28	9.0-9.0
Radiotherapy after local excision of rectal cancer	25-36	9.0-9.0
Radiotherapy for oesophageal cancer after incomplete resection	25-30	9.0-9.0
Palliative radiotherapy for cervical cancer	1-3	9.0-9.0
Palliative radiotherapy for endometrial cancer	1-3	9.0-9.0
Palliative radiotherapy for NSCLC patients with symptomatic local disease and poor ECOG	1-2	9.0-9.0
Chemoradiotherapy for glottic cancer	33-35	9.0-9.0

Radiotherapy for stage I-II oral cavity cancer	33-37	9.0-9.0
Chemoradiotherapy for oral cavity cancer	33-35	9.0-9.0
Chemoradiotherapy for hypopharyngeal cancer	33-35	9.0-9.0
Radiotherapy for stage I/II vaginal cancer	25-28	9.0-9.0
Radiotherapy for T1N0M0 anal cancer	25-28	9.0-9.0
Radiotherapy for distant lymph node metastases of ovarian cancer	10-14	9.0-9.0
Adjuvant radiotherapy for supraglottic cancer	30-33	9.0-9.0
Radiotherapy for embryonal tumours	30-32	9.0-9.0
Radiotherapy for anaplastic oligodendroglioma	30-33	9.0-9.0
Radical radiotherapy for local recurrence of cervix cancer	25-39	9.0-9.0
Radiotherapy for stage III/IVA vaginal cancer	25-30	9.0-9.0
Radiotherapy for stage I-II oropharyngeal cancer	33-37	9.0-9.0
Radiotherapy for stage I-II hypopharyngeal cancer	33-37	9.0-9.0
Chemoradiotherapy for supraglottic cancer	33-35	9.0-9.0
Radiotherapy for relapse of advanced stage Hodgkin lymphoma	15-20	9.0-9.0
Radiotherapy for recurrent salivary gland cancer	30-39	9.0-9.0
Radiotherapy for stage I seminoma nodal recurrence	15-25	9.0-9.0
Radiotherapy for stage IVB vaginal cancer	1-10	9.0-9.0
Radiotherapy for early stage nasopharyngeal cancer	33-35	9.0-9.0
Radiotherapy for ALL CNS relapse	12-16	9.0-9.0

Radiotherapy for nodal recurrence of vulvar cancer	25-30	9.0-9.0
Radiotherapy for testicular cancer isolated brain recurrence	20-27	9.0-9.0
Radiotherapy for pilocytic astrocytoma	29-30	9.0-9.0
Palliative radiotherapy for local recurrence of cervix cancer	1-3	9.0-9.0
Radiotherapy for testicular cancer brain metastases at diagnosis	20-27	9.0-9.0
Radiotherapy for vaginal cancer local recurrence	25-30	9.0-9.0
Radiotherapy for NSCLC soft tissue metastases	1-2	9.0-9.0
Radiotherapy for stage III seminoma residual disease post-chemotherapy	15-25	9.0-9.0
Radiotherapy for stage IIC seminoma residual disease post-chemotherapy	15-25	9.0-9.0
Adjuvant radiotherapy post-resection of pancreatic cancer	25-28	9.0-9.0
Pre-operative radiotherapy for oesophageal cancer	25-28	9.0-9.0
Radiotherapy for recurrent supraglottic cancer	30-33	9.0-9.0

Appendix 2 References

1. Delaney GP, Jacob S, Featherstone C*, et al.* Radiotherapy in cancer care: estimating optimal utilisation from a review of evidence-based clinical guidelines. Sydney: Collaboration for Cancer Outcomes Research and Evaluation (CCORE), Liverpool Hospital; 2003.
2. Delaney G, Jacob S, Featherstone C*, et al.* The role of radiotherapy in cancer treatment: estimating optimal utilization from a review of evidence-based clinical guidelines. *Cancer* 2005;104:1129-1137.
3. Statewide Services Development Branch. Radiotherapy services in NSW strategic plan to 2016- Selected Specialty and Statewide Services Plans. Sydney: NSW Department of Health; 2010.
4. Morgan GW, Barton M, Atkinson C*, et al.* 'GAP' in radiotherapy services in Australia and New Zealand in 2009. *J Med Imaging Radiat Oncol* 2010;54:287-297.
5. Morgan G, Barton M, Crossing S*, et al.* A 'Catch Up' Plan for radiotherapy in New South Wales to 2012. *J Med Imaging Radiat Oncol* 2009;53:419-430.
6. Bentzen SM, Heeren G, Cottier B*, et al.* Towards evidence-based guidelines for radiotherapy infrastructure and staffing needs in Europe: the ESTRO QUARTS project. *Radiother Oncol* 2005;75:355-365.
7. Erridge SC, Featherstone C, Chalmers R*, et al.* What will be the radiotherapy machine capacity required for optimal delivery of radiotherapy in Scotland in 2015? *Eur J Cancer* 2007;43:1802-1809.
8. Scottish Executive Health Department. Radiotherapy Activity Planning for Scotland 2011-2015: http://www.scotland.gov.uk/Resource/Doc/90297/0021749.pdf; 2006. Accessed 29/5/2012.
9. Radiation Oncology Jurisdictional Implementation Group. Final report. Canberra: Department of Health and Ageing; 2003.
10. Jena R, Round C, Mee T*, et al.* The Malthus programme--a new tool for estimating radiotherapy demand at a local level. *Clin Oncol (R Coll Radiol)* 2012;24:1-3.
11. Statewide and Rural Health Services and Capital Planning. 2010 Radiotherapy management information system report. Sydney: NSW Ministry of Health; 2011.

12. Williams MV, Summers ET, Drinkwater K*, et al.* Radiotherapy dose fractionation, access and waiting times in the countries of the UK in 2005. *Clin Oncol (R Coll Radiol)* 2007;19:273-286.
13. Williams MV, Drinkwater KJ. Geographical variation in radiotherapy services across the UK in 2007 and the effect of deprivation. *Clin Oncol (R Coll Radiol)* 2009;21:431-440.
14. National Health and Medical Research Council. A guide to the development, implementation and evaluation of clinical practice guidelines. Canberra: Commonwealth of Australia; 1999.
15. Australian Institute of Health and Welfare (AIHW) and Australasian Association of Cancer Registries (AACR). Cancer in Australia 1998. CAN 12. 2001. Cancer Series No 17. Canberra: AIHW and AACR; 2001.
16. Australian Institute of Health and Welfare (AIHW) and Australasian Association of Cancer Registries (AACR). Cancer in Australia: an overview, 2008. Cancer series no. 46. Cat. no. CAN 42. Canberra, AIHW; 2008.
17. Sidhom MA, Kneebone AB, Lehman M*, et al.* Post-prostatectomy radiation therapy: consensus guidelines of the Australian and New Zealand Radiation Oncology Genito-Urinary Group. *Radiother Oncol* 2008;88:10-19.
18. The Royal College of Radiologists. Radiotherapy dose-fractionation. London: Royal College of Radiologists; 2006.
19. Hayden AJ, Martin JM, Kneebone AB*, et al.* Australian & New Zealand Faculty of Radiation Oncology Genito-Urinary Group: 2010 consensus guidelines for definitive external beam radiotherapy for prostate carcinoma. *J Med Imaging Radiat Oncol* 2010;54:513-525.
20. National Comprehensive Cancer Network. NCCN Clinical Practice Guidelines in Oncology: Prostate Cancer Version 1.2011: www.nccn.org; 2010. Accessed 30/12/2010.
21. Brundage M, Lukka H, Crook J*, et al.* The use of conformal radiotherapy and the selection of radiation dose in T1 or T2 low or intermediate risk prostate cancer - a systematic review. *Radiother Oncol* 2002;64:239-250.
22. Cancer Care Nova Scotia. Guidelines for the management of prostate cancer: www.cancercare.ns.ca; 2006. Accessed 16/7/2011.

23. Australian Cancer Network Management of Metastatic Prostate Cancer Working Party. Clinical practice guidelines for the management of locally advanced and metastatic prostate cancer. Sydney: Cancer Council Australia and Australian Cancer Network; 2010.
24. Quinn DI, Henshall SM, Haynes AM*, et al.* Prognostic significance of pathologic features in localized prostate cancer treated with radical prostatectomy: implications for staging systems and predictive models. *J Clin Oncol* 2001;19:3692-3705.
25. Zietman AL, Thakral H, Wilson L*, et al.* Conservative management of prostate cancer in the prostate specific antigen era: the incidence and time course of subsequent therapy. *J Urol* 2001;166:1702-1706.
26. Shappley WV, 3rd, Kenfield SA, Kasperzyk JL*, et al.* Prospective study of determinants and outcomes of deferred treatment or watchful waiting among men with prostate cancer in a nationwide cohort. *J Clin Oncol* 2009;27:4980-4985.
27. Delaney G, Jacob S, Barton M. Estimating the optimal external-beam radiotherapy utilization rate for genitourinary malignancies. *Cancer* 2005;103:462-473.
28. National Health and Medical Research Council. Clinical practice guidelines: evidence–based information and recommendations for the management of localised prostate cancer. Sydney: Australian Cancer Network; 2002.
29. Skala M, Berry M, Duchesne G*, et al.* Australian and New Zealand three-dimensional conformal radiation therapy consensus guidelines for prostate cancer. *Australas Radiol* 2004;48:493-501.
30. National Cancer Institute. PDQ Summary: Prostate Cancer: www.cancer.gov; 2010. Accessed 31/12/2010.
31. British Columbia Cancer Agency. Cancer Management Guidelines: Genitourinary Cancer (Prostate): www.bccancer.bc.ca; 2009. Accessed 16/7/2011.
32. Morgan SC, Walker-Dilks C, Eapen LJ*, et al.* Adjuvant Radiotherapy Following Radical Prostatectomy for Pathologic T3 or Margin-Positived Prostate Cancer. Evidence-based Series #3-17. Program in Evidence-

based Care (PEBC), Cancer Care Ontario (CCO). http://www.cancercare.on.ca; 2010, Accessed 20/7/2011.

33. Bolla M, van Poppel H, Collette L*, et al.* Postoperative radiotherapy after radical prostatectomy: a randomised controlled trial (EORTC trial 22911). *Lancet* 2005;366:572-578.
34. Thompson IM, Jr., Tangen CM, Paradelo J*, et al.* Adjuvant radiotherapy for pathologically advanced prostate cancer: a randomized clinical trial. *JAMA* 2006;296:2329-2335.
35. Wiegel T, Bottke D, Steiner U*, et al.* Phase III postoperative adjuvant radiotherapy after radical prostatectomy compared with radical prostatectomy alone in pT3 prostate cancer with postoperative undetectable prostate-specific antigen: ARO 96-02/AUO AP 09/95. *J Clin Oncol* 2009;27:2924-2930.
36. Anscher MS, Clough R, Dodge R. Radiotherapy for a rising prostate-specific antigen after radical prostatectomy: the first 10 years. *Int J Radiat Oncol Biol Phys* 2000;48:369-375.
37. Valicenti RK, Gomella LG, Ismail M*, et al.* Durable efficacy of early postoperative radiation therapy for high-risk pT3N0 prostate cancer: the importance of radiation dose. *Urology* 1998;52:1034-1040.
38. MacDonald OK, Schild SE, Vora S*, et al.* Salvage radiotherapy for men with isolated rising PSA or locally palpable recurrence after radical prostatectomy: do outcomes differ? *Urology* 2004;64:760-764.
39. Kuban DA, Tucker SL, Dong L*, et al.* Long-term results of the M. D. Anderson randomized dose-escalation trial for prostate cancer. *Int J Radiat Oncol Biol Phys* 2008;70:67-74.
40. Zietman AL, Bae K, Slater JD*, et al.* Randomized trial comparing conventional-dose with high-dose conformal radiation therapy in early-stage adenocarcinoma of the prostate: long-term results from proton radiation oncology group/american college of radiology 95-09. *J Clin Oncol* 2010;28:1106-1111.
41. Dearnaley DP, Sydes MR, Graham JD*, et al.* Escalated-dose versus standard-dose conformal radiotherapy in prostate cancer: first results from the MRC RT01 randomised controlled trial. *Lancet Oncol* 2007;8:475-487.

42. Al-Mamgani A, van Putten WL, Heemsbergen WD*, et al.* Update of Dutch multicenter dose-escalation trial of radiotherapy for localized prostate cancer. *Int J Radiat Oncol Biol Phys* 2008;72:980-988.
43. Beckendorf V, Guerif S, Le Prise E*, et al.* 70 Gy versus 80 Gy in localized prostate cancer: 5-year results of GETUG 06 randomized trial. *Int J Radiat Oncol Biol Phys* 2011;80:1056-1063.
44. Viani GA, Stefano EJ, Afonso SL. Higher-than-conventional radiation doses in localized prostate cancer treatment: a meta-analysis of randomized, controlled trials. *Int J Radiat Oncol Biol Phys* 2009;74:1405-1418.
45. Cancer Council NSW. The NSW Prostate Cancer Care and Outcomes Study. Accessed 19/7/2011: www.cancercouncil.com.au; 2011.
46. Koppie TM, Grossfeld GD, Miller D*, et al.* Patterns of treatment of patients with prostate cancer initially managed with surveillance: results from The CaPSURE database. Cancer of the Prostate Strategic Urological Research Endeavor. *J Urol* 2000;164:81-88.
47. Adolfsson J, Ronstrom L, Lowhagen T*, et al.* Deferred treatment of clinically localized low grade prostate cancer: the experience from a prospective series at the Karolinska Hospital. *J Urol* 1994;152:1757-1760.
48. Epstein JI, Paull G, Eggleston JC*, et al.* Prognosis of untreated stage A1 prostatic carcinoma: a study of 94 cases with extended followup. *J Urol* 1986;136:837-839.
49. Johansson JE. Expectant management of early stage prostatic cancer: Swedish experience. *J Urol* 1994;152:1753-1756.
50. Markiewicz D, Hanks GE. Therapeutic options in the management of incidental carcinoma of the prostate. *Int J Radiat Oncol Biol Phys* 1991;20:153-167.
51. Wu H, Sun L, Moul JW*, et al.* Watchful waiting and factors predictive of secondary treatment of localized prostate cancer. *J Urol* 2004;171:1111-1116.
52. Klotz L, Zhang L, Lam A*, et al.* Clinical results of long-term follow-up of a large, active surveillance cohort with localized prostate cancer. *J Clin Oncol* 2010;28:126-131.

53. Wilson D, Hiller L, Gray L*, et al.* The effect of biological effective dose on time to symptom progression in metastatic renal cell carcinoma. *Clin Oncol (R Coll Radiol)* 2003;15:400-407.
54. National Comprehensive Cancer Network. NCCN Clinical Practice Guidelines in Oncology: Renal Cancer Version 1.2011: www.nccn.org; 2010. Accessed 30/12/2010.
55. National Cancer Institute. PDQ Summary: Renal Cell Cancer Treatment: www.cancer.gov; 2010. Accessed 7/4/2011.
56. British Columbia Cancer Agency. Cancer Management Guidelines: Genitourinary Cancer (Kidney): www.bccancer.bc.ca; 2008. Accessed 7/4/2011.
57. Cancer Care Nova Scotia. Guidelines for the management of kidney cancer: www.cancercare.ns.ca; 2004. Accessed 7/4/2011.
58. Halperin EC, Harisiadis L. The role of radiation therapy in the management of metastatic renal cell carcinoma. *Cancer* 1983;51:614-617.
59. Onufrey V, Mohiuddin M. Radiation therapy in the treatment of metastatic renal cell carcinoma. *Int J Radiat Oncol Biol Phys* 1985;11:2007-2009.
60. DiBiase SJ, Valicenti RK, Schultz D*, et al.* Palliative irradiation for focally symptomatic metastatic renal cell carcinoma: support for dose escalation based on a biological model. *J Urol* 1997;158:746-749.
61. Scottish Intercollegiate Guidelines Network. Management of transitional cell carcinoma of the bladder. A national clinical guideline (report no.85): http://www.sign.ac.uk/pdf/sign87.pdf; 2005. Accessed 28/7/2011.
62. National Comprehensive Cancer Network. NCCN Clinical Practice Guidelines in Oncology: Bladder Cancer Version 1.2011: www.nccn.org; 2010. Accessed 30/12/2010.
63. Millar JL, Frydenberg M, Toner G*, et al.* Management of muscle-invasive bladder cancer in Victoria, 1990-1995. *ANZ J Surg* 2006;76:113-119.
64. Hayter CR, Paszat LF, Groome PA*, et al.* The management and outcome of bladder carcinoma in Ontario, 1982-1994. *Cancer* 2000;89:142-151.
65. National Cancer Institute. PDQ Summary: Bladder Cancer: www.cancer.gov; 2010. Accessed 31/12/2010.

66. British Columbia Cancer Agency. Cancer Management Guidelines: Genitourinary Cancer (Bladder): www.bccancer.bc.ca; 2008. Accessed 28/7/2011.
67. Marcial VA, Amato DA, Brady LW*, et al.* Split-course radiotherapy of carcinoma of the urinary bladder stages C and D1. A Radiation Therapy Oncology Group Study. *Am J Clin Oncol* 1985;8:185-199.
68. Quilty PM, Duncan W, Kerr GR. Results of a randomised study to evaluate influence of dose on morbidity in radiotherapy for bladder cancer. *Clin Radiol* 1985;36:615-618.
69. Duchesne GM, Bolger JJ, Griffiths GO*, et al.* A randomized trial of hypofractionated schedules of palliative radiotherapy in the management of bladder carcinoma: results of medical research council trial BA09. *Int J Radiat Oncol Biol Phys* 2000;47:379-388.
70. National Comprehensive Cancer Network. NCCN Clinical Practice Guidelines in Oncology: Testicular Cancer Version 1.2011: www.nccn.org; 2011. Accessed 30/12/2010.
71. National Cancer Institute. PDQ Summary: Testicular Cancer Treatment: www.cancer.gov; 2010. Accessed 31/12/2010.
72. Wood L, Kollmannsberger C, Jewett M*, et al.* Canadian consensus guidelines for the management of testicular germ cell cancer. *Can Urol Assoc J* 2010;4:e19-38.
73. British Columbia Cancer Agency. Cancer Management Guidelines: Genitourinary Cancer (Testis): www.bccancer.bc.ca; 2005. Accessed 10/8/2011.
74. Cancer Care Nova Scotia. Guidelines for the management of adult testicular cancer: www.cancercare.ns.ca; 2005. Accessed 10/8/2011.
75. European Association of Urology. Guidelines on testicular cancer: www.uroweb.org; 2009. Accessed 10/8/2011.
76. Schmoll HJ, Jordan K, Huddart R*, et al.* Testicular seminoma: ESMO Clinical Practice Guidelines for diagnosis, treatment and follow-up. *Ann Oncol* 2010;21 Suppl 5:v140-146.
77. Krege S, Beyer J, Souchon R*, et al.* European consensus conference on diagnosis and treatment of germ cell cancer: a report of the second

meeting of the European Germ Cell Cancer Consensus group (EGCCCG): part I. *Eur Urol* 2008;53:478-496.

78. Fossa SD, Bokemeyer C, Gerl A*, et al.* Treatment outcome of patients with brain metastases from malignant germ cell tumors. *Cancer* 1999;85:988-997.
79. Bokemeyer C, Nowak P, Haupt A*, et al.* Treatment of brain metastases in patients with testicular cancer. *J Clin Oncol* 1997;15:1449-1454.
80. Krege S, Beyer J, Souchon R*, et al.* European consensus conference on diagnosis and treatment of germ cell cancer: a report of the second meeting of the European Germ Cell Cancer Consensus Group (EGCCCG): part II. *Eur Urol* 2008;53:497-513.
81. Toner GC, Neerhut GJ, Schwarz MA*, et al.* The management of testicular cancer in Victoria, 1988-1993. Urology Study Committee of the Victorian Co-operative Oncology Group. *Med J Aust* 2001;174:328-331.
82. International Germ Cell Consensus Classification: a prognostic factor-based staging system for metastatic germ cell cancers. International Germ Cell Cancer Collaborative Group. *J Clin Oncol* 1997;15:594-603.
83. Kelty P, Frazier H, O'Connell K*, et al.* Germ cell testis cancer: 15-year review. *J Surg Oncol* 1996;62:30-33.
84. Motzer RJ, Geller NL, Tan CC*, et al.* Salvage chemotherapy for patients with germ cell tumors. The Memorial Sloan-Kettering Cancer Center experience (1979-1989). *Cancer* 1991;67:1305-1310.
85. Chung P, Mayhew LA, Warde P*, et al.* Management of stage I seminomatous testicular cancer: a systematic review. *Clin Oncol (R Coll Radiol)* 2010;22:6-16.
86. Schmoll HJ, Jordan K, Huddart R*, et al.* Testicular non-seminoma: ESMO Clinical Practice Guidelines for diagnosis, treatment and follow-up. *Ann Oncol* 2010;21 Suppl 5:v147-154.
87. Schmoll HJ, Souchon R, Krege S*, et al.* European consensus on diagnosis and treatment of germ cell cancer: a report of the European Germ Cell Cancer Consensus Group (EGCCCG). *Ann Oncol* 2004;15:1377-1399.
88. Krege S, Souchon R, Schmoll HJ. Interdisciplinary consensus on diagnosis and treatment of testicular germ cell tumors: result of an

update conference on evidence-based medicine (EBM). *Eur Urol* 2001;40:372-391.

89. Leibel SA, Phillips TL. Textbook of radiation oncology. (Second edition). Philadelphia, Pennsylvania: Saunders; 2004.
90. American Joint Committee on Cancer (AJCC). AJCC cancer staging manual, seventh edition. Chicago, Illinois: Springer; 2010.
91. Jones WG, Fossa SD, Mead GM*, et al.* Randomized trial of 30 versus 20 Gy in the adjuvant treatment of stage I Testicular Seminoma: a report on Medical Research Council Trial TE18, European Organisation for the Research and Treatment of Cancer Trial 30942 (ISRCTN18525328). *J Clin Oncol* 2005;23:1200-1208.
92. Classen J, Schmidberger H, Meisner C*, et al.* Radiotherapy for stages IIA/B testicular seminoma: final report of a prospective multicenter clinical trial. *J Clin Oncol* 2003;21:1101-1106.
93. Chung PW, Gospodarowicz MK, Panzarella T*, et al.* Stage II testicular seminoma: patterns of recurrence and outcome of treatment. *Eur Urol* 2004;45:754-759; discussion 759-760.
94. Hartmann JT, Bamberg M, Albers P. Multidisciplinary treatment and prognosis of patients with central nervous metastases (CNS) from testicular germ cell tumour (GCT) origin. *Proc Am Soc Clin Oncol* 2003;22:400.
95. Pizzocaro G, Salvioni R, Piva L*, et al.* Cisplatin combination chemotherapy in advanced seminoma. *Cancer* 1986;58:1625-1629.
96. Schmoll HJ, Harstrick A, Bokemeyer C*, et al.* Single-agent carboplatinum for advanced seminoma. A phase II study. *Cancer* 1993;72:237-243.
97. Howard GC, Conkey DS, Peoples S*, et al.* The management and outcome of patients with germ-cell tumours treated in the Edinburgh Cancer Centre between 1988 and 2002. *Clin Oncol (R Coll Radiol)* 2005;17:435-440.
98. National Comprehensive Cancer Network. NCCN Clinical Practice Guidelines in Oncology: Colon Cancer Version 2.2011: www.nccn.org 2010. Accessed 31/12/2010.

99. Delaney G, Barton M, Jacob S. Estimation of an optimal radiotherapy utilization rate for gastrointestinal carcinoma: a review of the evidence. *Cancer* 2004;101:657-670.
100. National Health and Medical Research Council, Australian Cancer Network Colorectal Cancer Guidelines Revision Committee. Clinical practice guidelines for the prevention, early detection and management of colorectal cancer. Sydney: The Cancer Council Australia and Australian Cancer Network; 2005.
101. National Cancer Institute. PDQ Summary: Colon Cancer: www.cancer.gov; 2010. Accessed 31/12/2010.
102. British Columbia Cancer Agency. Cancer Management Guidelines: Gastrointestinal Cancer (Colon): www.bccancer.bc.ca; 2005. Accessed 7/3/2011.
103. Scottish Intercollegiate Guidelines Network. Management of colorectal cancer. A national clinical guideline (report no.67): www.sign.ac.uk/pdf/sign67.pdf; 2003. Accessed 22/3/2011.
104. The Royal College of Surgeons of England. Guidelines for the management of colorectal cancer, 3rd edition: http://www.rcseng.ac.uk/; 2007. Accessed 21/3/2011.
105. National Comprehensive Cancer Network. NCCN Clinical Practice Guidelines in Oncology: Rectal Cancer Version 2.2011: www.nccn.org; 2010. Accessed 30/12/2010.
106. Russell AH, Harris J, Rosenberg PJ*, et al.* Anal sphincter conservation for patients with adenocarcinoma of the distal rectum: long-term results of radiation therapy oncology group protocol 89-02. *Int J Radiat Oncol Biol Phys* 2000;46:313-322.
107. Wong RK, Berry S, Spithoff K*, et al.* Preoperative or postoperative therapy for stage II or III rectal cancer: an updated practice guideline. *Clin Oncol (R Coll Radiol)* 2010;22:265-271.
108. McCall JL, Cox MR, Wattchow DA. Analysis of local recurrence rates after surgery alone for rectal cancer. *Int J Colorectal Dis* 1995;10:126-132.
109. Garcia-Aguilar J, Cromwell JW, Marra C*, et al.* Treatment of locally recurrent rectal cancer. *Dis Colon Rectum* 2001;44:1743-1748.

110. Paty PB, Nash GM, Baron P*, et al.* Long-term results of local excision for rectal cancer. *Ann Surg* 2002;236:522-529; discussion 529-530.
111. Clinical Governance Unit. The National Colorectal Cancer Care Survey: Australian clinical practice in 2000. National Cancer Control Initiative, Melbourne; 2002.
112. National Cancer Institute. PDQ Summary: Rectal Cancer Treatment: www.cancer.gov; 2010. Accessed 30/12/2010.
113. British Columbia Cancer Agency. Cancer Management Guidelines: Gastrointestinal Cancer (Rectum): www.bccancer.bc.ca; 2005. Accessed 23/3/2011.
114. Gunderson LL, Sosin H. Areas of failure found at reoperation (second or symptomatic look) following "curative surgery" for adenocarcinoma of the rectum. Clinicopathologic correlation and implications for adjuvant therapy. *Cancer* 1974;34:1278-1292.
115. Gagliardi G, Hawley PR, Hershman MJ*, et al.* Prognostic factors in surgery for local recurrence of rectal cancer. *Br J Surg* 1995;82:1401-1405.
116. Huguier M, Houry S. Treatment of local recurrence of rectal cancer. *Am J Surg* 1998;175:288-292.
117. Lopez-Kostner F, Fazio VW, Vignali A*, et al.* Locally recurrent rectal cancer: predictors and success of salvage surgery. *Dis Colon Rectum* 2001;44:173-178.
118. Saito N, Koda K, Takiguchi N*, et al.* Curative surgery for local pelvic recurrence of rectal cancer. *Dig Surg* 2003;20:192-199; discussion 200.
119. Ogunbiyi OA, McKenna K, Birnbaum EH*, et al.* Aggressive surgical management of recurrent rectal cancer--is it worthwhile? *Dis Colon Rectum* 1997;40:150-155.
120. Wong R, Thomas G, Cummings B*, et al.* In search of a dose-response relationship with radiotherapy in the management of recurrent rectal carcinoma in the pelvis: a systematic review. *Int J Radiat Oncol Biol Phys* 1998;40:437-446.
121. National Comprehensive Cancer Network. NCCN Clinical Practice Guidelines in Oncology: Pancreatic Adenocarcinoma Version 2.2010: www.nccn.org; 2010. Accessed 30/12/2010.

122. Krzyzanowska MK, Weeks JC, Earle CC. Treatment of locally advanced pancreatic cancer in the real world: population-based practices and effectiveness. *J Clin Oncol* 2003;21:3409-3414.
123. National Cancer Institute. PDQ Summary: Pancreatic Cancer Treatment: www.cancer.gov; 2010. Accessed 25/3/2011.
124. British Columbia Cancer Agency. Cancer Management Guidelines: Gastrointestinal Cancer (Pancreas): www.bccancer.bc.ca; 2005. Accessed 25/3/2011.
125. Earle CC, Agboola O, Maroun J*, et al.* The treatment of locally advanced pancreatic cancer: Program in Evidence-based Care, Cancer Care Ontario, www.cancercare.on.ca; 2010. Accessed 25/3/2011.
126. Jonker D, Bouttell E, Kamra J*, et al.* Chemotherapy or radiotherapy for resectable pancreatic adenocarcinoma: Clinical practice guidelines: Program in Evidence-based Care, Cancer Care Ontario, www.cancercare.on.ca; 2007. Accessed 25/3/2011.
127. Kalser MH, Ellenberg SS. Pancreatic cancer. Adjuvant combined radiation and chemotherapy following curative resection. *Arch Surg* 1985;120:899-903.
128. Further evidence of effective adjuvant combined radiation and chemotherapy following curative resection of pancreatic cancer. Gastrointestinal Tumor Study Group. *Cancer* 1987;59:2006-2010.
129. Klinkenbijl JH, Jeekel J, Sahmoud T*, et al.* Adjuvant radiotherapy and 5-fluorouracil after curative resection of cancer of the pancreas and periampullary region: phase III trial of the EORTC gastrointestinal tract cancer cooperative group. *Ann Surg* 1999;230:776-782; discussion 782-774.
130. Neoptolemos JP, Dunn JA, Stocken DD*, et al.* Adjuvant chemoradiotherapy and chemotherapy in resectable pancreatic cancer: a randomised controlled trial. *Lancet* 2001;358:1576-1585.
131. Neoptolemos JP, Stocken DD, Friess H*, et al.* A randomized trial of chemoradiotherapy and chemotherapy after resection of pancreatic cancer. *N Engl J Med* 2004;350:1200-1210.
132. Park JK, Yoon YB, Kim YT*, et al.* Survival and prognostic factors of unresectable pancreatic cancer. *J Clin Gastroenterol* 2008;42:86-91.

133. Mehta VK, Poen JC, Ford JM*, et al.* Protracted venous infusion 5-fluorouracil with concomitant radiotherapy compared with bolus 5-fluorouracil for unresectable pancreatic cancer. *Am J Clin Oncol* 2001;24:155-159.
134. Boz G, De Paoli A, Innocente R*, et al.* Radiotherapy and continuous infusion 5-fluorouracil in patients with nonresectable pancreatic carcinoma. *Int J Radiat Oncol Biol Phys* 2001;51:736-740.
135. National Comprehensive Cancer Network. NCCN Clinical Practice Guidelines in Oncology: Gastric Cancer Version 2.2010: www.nccn.org; 2010. Accessed 30/12/2010.
136. National Cancer Institute. PDQ Summary: Gastric Cancer: www.cancer.gov; 2010. Accessed 31/12/2010.
137. British Columbia Cancer Agency. Cancer Management Guidelines: Gastrointestinal Cancer (Stomach): www.bccancer.bc.ca; 2005. Accessed 29/12/2010.
138. Scottish Intercollegiate Guidelines Network. Management of oesophageal and gastric cancer. A national clinical guideline (report no.87): http://www.sign.ac.uk/pdf/sign87.pdf; 2006. Accessed 28/3/2011.
139. Macdonald JS, Smalley SR, Benedetti J*, et al.* Chemoradiotherapy after surgery compared with surgery alone for adenocarcinoma of the stomach or gastroesophageal junction. *N Engl J Med* 2001;345:725-730.
140. Cunningham D, Allum WH, Stenning SP*, et al.* Perioperative chemotherapy versus surgery alone for resectable gastroesophageal cancer. *N Engl J Med* 2006;355:11-20.
141. National Comprehensive Cancer Network. NCCN Clinical Practice Guidelines in Oncology: Esophageal Cancer Version 2.2010: www.nccn.org; 2010. Accessed 31/12/2010.
142. Alexiou C, Beggs D, Salama FD*, et al.* Surgery for esophageal cancer in elderly patients: the view from Nottingham. *J Thorac Cardiovasc Surg* 1998;116:545-553.
143. Junginger T, Dutkowski P. Selective approach to the treatment of oesophageal cancer. *Br J Surg* 1996;83:1473-1477.

144. Surgical resection with or without preoperative chemotherapy in oesophageal cancer: a randomised controlled trial. *Lancet* 2002;359:1727-1733.
145. Smith GL, Smith BD, Buchholz TA*, et al.* Patterns of care and locoregional treatment outcomes in older esophageal cancer patients: The SEER-Medicare Cohort. *Int J Radiat Oncol Biol Phys* 2009;74:482-489.
146. National Cancer Institute. PDQ Summary: Esophageal Cancer Treatment: www.cancer.gov; 2010. Accessed 31/12/2010.
147. British Columbia Cancer Agency. Cancer Management Guidelines: Gastrointestinal Cancer (Esophagus and Cardia): www.bccancer.bc.ca; 2005. Accessed 28/3/2011.
148. Malthaner R, Wong RK, Spithoff K. Preoperative or postoperative therapy for resectable oesophageal cancer: an updated practice guideline. *Clin Oncol (R Coll Radiol)* 2010;22:250-256.
149. Wong RKS, Malthaner RA, Zuraw L*, et al.* Combined Modality Radiotherapy and Chemotherapy in the Non-surgical Management of Localized Carcinoma of the Esophagus: Practice Guideline Report #2-12: www.cancercare.on.ca; 2010. Accessed 28/3/2011.
150. Fiorica F, Di Bona D, Schepis F*, et al.* Preoperative chemoradiotherapy for oesophageal cancer: a systematic review and meta-analysis. *Gut* 2004;53:925-930.
151. Urschel JD, Vasan H. A meta-analysis of randomized controlled trials that compared neoadjuvant chemoradiation and surgery to surgery alone for resectable esophageal cancer. *Am J Surg* 2003;185:538-543.
152. Malthaner RA, Wong RK, Rumble RB*, et al.* Neoadjuvant or adjuvant therapy for resectable esophageal cancer: a clinical practice guideline. *BMC Cancer* 2004;4:67.
153. Gebski V, Burmeister B, Smithers BM*, et al.* Survival benefits from neoadjuvant chemoradiotherapy or chemotherapy in oesophageal carcinoma: a meta-analysis. *Lancet Oncol* 2007;8:226-234.
154. Fok M, Sham JS, Choy D*, et al.* Postoperative radiotherapy for carcinoma of the esophagus: a prospective, randomized controlled study. *Surgery* 1993;113:138-147.

155. Ask A, Albertsson M, Jarhult J*, et al.* A systematic overview of radiation therapy effects in oesophageal cancer. *Acta Oncol* 2003;42:462-475.
156. Teniere P, Hay JM, Fingerhut A*, et al.* Postoperative radiation therapy does not increase survival after curative resection for squamous cell carcinoma of the middle and lower esophagus as shown by a multicenter controlled trial. French University Association for Surgical Research. *Surg Gynecol Obstet* 1991;173:123-130.
157. Zieren HU, Muller JM, Jacobi CA*, et al.* Adjuvant postoperative radiation therapy after curative resection of squamous cell carcinoma of the thoracic esophagus: a prospective randomized study. *World J Surg* 1995;19:444-449.
158. Xiao ZF, Yang ZY, Liang J*, et al.* Value of radiotherapy after radical surgery for esophageal carcinoma: a report of 495 patients. *Ann Thorac Surg* 2003;75:331-336.
159. Herskovic A, Martz K, al-Sarraf M*, et al.* Combined chemotherapy and radiotherapy compared with radiotherapy alone in patients with cancer of the esophagus. *N Engl J Med* 1992;326:1593-1598.
160. al-Sarraf M, Martz K, Herskovic A*, et al.* Progress report of combined chemoradiotherapy versus radiotherapy alone in patients with esophageal cancer: an intergroup study. *J Clin Oncol* 1997;15:277-284.
161. Cooper JS, Guo MD, Herskovic A*, et al.* Chemoradiotherapy of locally advanced esophageal cancer: long-term follow-up of a prospective randomized trial (RTOG 85-01). Radiation Therapy Oncology Group. *JAMA* 1999;281:1623-1627.
162. Minsky BD, Pajak TF, Ginsberg RJ*, et al.* INT 0123 (Radiation Therapy Oncology Group 94-05) phase III trial of combined-modality therapy for esophageal cancer: high-dose versus standard-dose radiation therapy. *J Clin Oncol* 2002;20:1167-1174.
163. National Comprehensive Cancer Network. NCCN Clinical Practice Guidelines in Oncology: Hepatobiliary Cancers Version 2.2010: www.nccn.org; 2010. Accessed 30/12/2010.
164. National Cancer Institute. PDQ Summary: Adult Primary Liver Cancer Treatment: www.cancer.gov; 2010. Accessed 24/3/2011.

165. British Columbia Cancer Agency. Cancer Management Guidelines: Gastrointestinal Cancer (Liver): www.bccancer.bc.ca; 2006. Accessed 24/03/2011.
166. Houry S, Barrier A, Huguier M. Irradiation therapy for gallbladder carcinoma: recent advances. *J Hepatobiliary Pancreat Surg* 2001;8:518-524.
167. National Cancer Institute. PDQ Summary: Gallbladder Cancer Treatment: www.cancer.gov; 2010. Accessed 27/3/2011.
168. British Columbia Cancer Agency. Cancer Management Guidelines: Gastrointestinal Cancer (Gallbladder): www.bccancer.bc.ca; 2006. Accessed 27/3/2011.
169. National Cancer Institute. PDQ Summary: Small Intestine Cancer: www.cancer.gov; 2010. Accessed 31/12/2010.
170. British Columbia Cancer Agency. Cancer Management Guidelines: Gastrointestinal Cancer (Small Bowel Malignancies): www.bccancer.bc.ca; 2007. Accessed 3/4/2012.
171. National Comprehensive Cancer Network. NCCN Clinical Practice Guidelines in Oncology: Anal Carcinoma Version 1.2011: www.nccn.org; 2010. Accessed 30/12/2010.
172. National Cancer Institute. Surveillance Epidemiology and End Results: http://seer.cancer.gov/; 2011. Accessed 20/7/2011.
173. Mitchell SE, Mendenhall WM, Zlotecki RA*, et al.* Squamous cell carcinoma of the anal canal. *Int J Radiat Oncol Biol Phys* 2001;49:1007-1013.
174. National Cancer Institute. PDQ Summary: Anal Cancer: www.cancer.gov; 2010. Accessed 31/12/2010.
175. British Columbia Cancer Agency. Cancer Management Guidelines: Gastrointestinal Cancer (Anus): www.bccancer.bc.ca; 2005. Accessed 30/3/2012.
176. Spithoff K, Cummings B, Jonker D*, et al.* Management of squamous cell cancer of the anal canal: guideline recommendations. Program in Evidence-based Care (PEBC), Cancer Care Ontario (CCO). : http://www.cancercare.on.ca; 2009. Accessed 30/3/2012.

177. Ferrigno R, Nakamura RA, Dos Santos Novaes PE*, et al.* Radiochemotherapy in the conservative treatment of anal canal carcinoma: retrospective analysis of results and radiation dose effectiveness. *Int J Radiat Oncol Biol Phys* 2005;61:1136-1142.
178. Huang K, Haas-Kogan D, Weinberg V*, et al.* Higher radiation dose with a shorter treatment duration improves outcome for locally advanced carcinoma of anal canal. *World J Gastroenterol* 2007;13:895-900.
179. Fisher B, Dignam J, Wolmark N*, et al.* Lumpectomy and radiation therapy for the treatment of intraductal breast cancer: findings from National Surgical Adjuvant Breast and Bowel Project B-17. *J Clin Oncol* 1998;16:441-452.
180. Bijker N, Meijnen P, Peterse JL*, et al.* Breast-conserving treatment with or without radiotherapy in ductal carcinoma-in-situ: ten-year results of European Organisation for Research and Treatment of Cancer randomized phase III trial 10853--a study by the EORTC Breast Cancer Cooperative Group and EORTC Radiotherapy Group. *J Clin Oncol* 2006;24:3381-3387.
181. Breast Cancer Disease Site Group. Breast Irradiation in Women with Early Stage Invasive Breast Cancer Following Breast Conserving Surgery. Practice Guideline Report #1-2. Program in Evidence-based Care (PEBC), Cancer Care Ontario (CCO). http://www.cancercare.on.ca; 2002. Accessed 15/10/2010.
182. Whelan T, Olivotto I, Levine M. Clinical practice guidelines for the care and treatment of breast cancer: breast radiotherapy after breast-conserving surgery (2003 update): http://www.cmaj.ca/content/suppl/2007/06/14/158.3.DC1/bc6.pdf; 2003. Accessed 15/10/2010.
183. British Columbia Cancer Agency. Cancer Management Guidelines: Breast Cancer: www.bccancer.bc.ca; 2005. Accessed 15/10/2010.
184. National Institute for Clinical Excellence. Clinical Guideline 80. Early and locally advanced breast cancer: diagnosis and treatment: www.nice.org.uk/CG080NICEguideline; 2009. Accessed 15/10/2010.

185. National Comprehensive Cancer Network. NCCN Clinical Practice Guidelines in Oncology: Breast Cancer Version 2.2010: www.nccn.org; 2010. Accessed 15/10/2010.
186. Smith BD, Bentzen SM, Correa CR*, et al.* Fractionation for Whole Breast Irradiation: An American Society for Radiation Oncology (ASTRO) Evidence-Based Guideline. *Int J Radiat Oncol Biol Phys* 2010.
187. Kennedy MJ, Abeloff MD. Management of locally recurrent breast cancer. *Cancer* 1993;71:2395-2409.
188. Schwaibold F, Fowble BL, Solin LJ*, et al.* The results of radiation therapy for isolated local regional recurrence after mastectomy. *Int J Radiat Oncol Biol Phys* 1991;21:299-310.
189. Halverson KJ, Perez CA, Kuske RR*, et al.* Isolated local-regional recurrence of breast cancer following mastectomy: radiotherapeutic management. *Int J Radiat Oncol Biol Phys* 1990;19:851-858.
190. Recht A, Edge SB, Solin LJ*, et al.* Postmastectomy radiotherapy: clinical practice guidelines of the American Society of Clinical Oncology. *J Clin Oncol* 2001;19:1539-1569.
191. Shenkier T, Weir L, Levine M*, et al.* Clinical practice guidelines for the care and treatment of breast cancer: 15. Treatment for women with stage III or locally advanced breast cancer. *Cmaj* 2004;170:983-994.
192. Owen JR, Ashton A, Bliss JM*, et al.* Effect of radiotherapy fraction size on tumour control in patients with early-stage breast cancer after local tumour excision: long-term results of a randomised trial. *Lancet Oncol* 2006;7:467-471.
193. Bentzen SM, Agrawal RK, Aird EG*, et al.* The UK Standardisation of Breast Radiotherapy (START) Trial A of radiotherapy hypofractionation for treatment of early breast cancer: a randomised trial. *Lancet Oncol* 2008;9:331-341.
194. Bentzen SM, Agrawal RK, Aird EG*, et al.* The UK Standardisation of Breast Radiotherapy (START) Trial B of radiotherapy hypofractionation for treatment of early breast cancer: a randomised trial. *Lancet* 2008;371:1098-1107.

195. Whelan TJ, Pignol JP, Levine MN*, et al.* Long-term results of hypofractionated radiation therapy for breast cancer. *N Engl J Med* 2010;362:513-520.
196. Haylock BJ, Coppin CM, Jackson J*, et al.* Locoregional first recurrence after mastectomy: prospective cohort studies with and without immediate chemotherapy. *Int J Radiat Oncol Biol Phys* 2000;46:355-362.
197. Willner J, Kiricuta IC, Kolbl O. Locoregional recurrence of breast cancer following mastectomy: always a fatal event? Results of univariate and multivariate analysis. *Int J Radiat Oncol Biol Phys* 1997;37:853-863.
198. Delaney G, Barton M, Jacob S. Estimation of an optimal radiotherapy utilization rate for breast carcinoma: a review of the evidence. *Cancer* 2003;98:1977-1986.
199. National Health and Medical Research Council. Clinical practice guidelines for the management of early breast cancer: second edition. Canberra: Commonwealth of Australia; 2001.
200. National Health and Medical Research Council. Clinical practice guidelines for the management of advanced breast cancer; 2001.
201. National Breast Cancer Centre. The clinical management of ductal carcinoma in situ, lobular carcinoma in situ and atypical hyperplasia of the breast; 2003.
202. National Cancer Institute. PDQ Summary: Breast Cancer: www.cancer.gov; 2010. Accessed 15/10/2010.
203. Shelley W, McCready D, Holloway C*, et al.* Management of Ductal Carcinoma in Situ of the Breast: A Clinical Practice Guideline. Evidence-based Series #1-10. Program in Evidence-based Care (PEBC), Cancer Care Ontario (CCO). http://www.cancercare.on.ca; 2006. Accessed 15/10/2010.
204. Truong PT, Olivotto IA, Whelan TJ*, et al.* Clinical practice guidelines for the care and treatment of breast cancer: 16. Locoregional post-mastectomy radiotherapy. *Cmaj* 2004;170:1263-1273.
205. Whelan T, MacKenzie R, Julian J*, et al.* Randomized trial of breast irradiation schedules after lumpectomy for women with lymph node-negative breast cancer. *J Natl Cancer Inst* 2002;94:1143-1150.

206. Yarnold J, Ashton A, Bliss J*, et al.* Fractionation sensitivity and dose response of late adverse effects in the breast after radiotherapy for early breast cancer: long-term results of a randomised trial. *Radiother Oncol* 2005;75:9-17.
207. Bartelink H, Horiot JC, Poortmans P*, et al.* Recurrence rates after treatment of breast cancer with standard radiotherapy with or without additional radiation. *N Engl J Med* 2001;345:1378-1387.
208. Polgar C, Fodor J, Orosz Z*, et al.* Electron and high-dose-rate brachytherapy boost in the conservative treatment of stage I-II breast cancer first results of the randomized Budapest boost trial. *Strahlenther Onkol* 2002;178:615-623.
209. Romestaing P, Lehingue Y, Carrie C*, et al.* Role of a 10-Gy boost in the conservative treatment of early breast cancer: results of a randomized clinical trial in Lyon, France. *J Clin Oncol* 1997;15:963-968.
210. Metz JM, Schultz DJ, Fox K*, et al.* Long-term outcome after postmastectomy radiation therapy for breast cancer patients at high risk for local-regional recurrence. *Cancer J Sci Am* 1999;5:77-83.
211. Freedman GM, Fowble BL, Hanlon AL*, et al.* Postmastectomy radiation and adjuvant systemic therapy: outcomes in high-risk women with stage II-III breast cancer and assessment of clinical, pathologic, and treatment-related factors influencing local-regional control. *Breast J* 1997;3:337-344.
212. Aberizk WJ, Silver B, Henderson IC*, et al.* The use of radiotherapy for treatment of isolated locoregional recurrence of breast carcinoma after mastectomy. *Cancer* 1986;58:1214-1218.
213. Owens JM, Roberts DB, Myers JN. The role of postoperative adjuvant radiation therapy in the treatment of mucosal melanomas of the head and neck region. *Arch Otolaryngol Head Neck Surg* 2003;129:864-868.
214. Temam S, Mamelle G, Marandas P*, et al.* Postoperative radiotherapy for primary mucosal melanoma of the head and neck. *Cancer* 2005;103:313-319.
215. Moreno MA, Roberts DB, Kupferman ME*, et al.* Mucosal melanoma of the nose and paranasal sinuses, a contemporary experience from the M. D. Anderson Cancer Center. *Cancer* 2010;116:2215-2223.

216. Chen JY, Hruby G, Scolyer RA*, et al.* Desmoplastic neurotropic melanoma: a clinicopathologic analysis of 128 cases. *Cancer* 2008;113:2770-2778.
217. Foote MC, Burmeister B, Burmeister E*, et al.* Desmoplastic melanoma: the role of radiotherapy in improving local control. *ANZ J Surg* 2008;78:273-276.
218. Chang DT, Amdur RJ, Morris CG*, et al.* Adjuvant radiotherapy for cutaneous melanoma: comparing hypofractionation to conventional fractionation. *Int J Radiat Oncol Biol Phys* 2006;66:1051-1055.
219. Ang KK, Peters LJ, Weber RS*, et al.* Postoperative radiotherapy for cutaneous melanoma of the head and neck region. *Int J Radiat Oncol Biol Phys* 1994;30:795-798.
220. National Comprehensive Cancer Network. NCCN Clinical Practice Guidelines in Oncology: Melanoma Version 1.2011: www.nccn.org; 2011. Accessed 30/12/2010.
221. Australian Cancer Network Melanoma Guidelines Revision Working Party. Clinical practice guidelines for the management of melanoma in Australia and New Zealand. Wellington: Cancer Council Australia and Australian Cancer Network, Sydney and New Zealand Guidelines Group; 2008.
222. Cohn-Cedermark G, Mansson-Brahme E, Rutqvist LE*, et al.* Metastatic patterns, clinical outcome, and malignant phenotype in malignant cutaneous melanoma. *Acta Oncol* 1999;38:549-557.
223. National Cancer Institute. PDQ Summary: Melanoma Treatment: www.cancer.gov; 2010. Accessed 31/12/2010.
224. British Columbia Cancer Agency. Cancer Management Guidelines: Skin Cancer: www.bccancer.bc.ca; 2008. Accessed 25/8/2011.
225. Delaney G, Barton M, Jacob S. Estimation of an optimal radiotherapy utilization rate for melanoma: a review of the evidence. *Cancer* 2004;100:1293-1301.
226. National Health and Medical Research Council. Clinical practice guidelines for the management of cutaneous melanoma. Sydney: Australian Cancer Network; 1999.

227. Yii NW, Eisen T, Nicolson M*, et al.* Mucosal malignant melanoma of the head and neck: the Marsden experience over half a century. *Clin Oncol (R Coll Radiol)* 2003;15:199-204.
228. Meleti M, Leemans CR, Mooi WJ*, et al.* Oral malignant melanoma: the amsterdam experience. *J Oral Maxillofac Surg* 2007;65:2181-2186.
229. Pessaux P, Pocard M, Elias D*, et al.* Surgical management of primary anorectal melanoma. *Br J Surg* 2004;91:1183-1187.
230. Henderson MA, Burmeister B, Thompson JF*, et al.* Adjuvant radiotherapy and regional lymph node field control in melanoma patients after lymphadenectomy: Results of an intergroup randomized trial (ANZMTG 01.02/TROG 02.01). *J Clin Oncol* 2009;27 (Suppl 18):LBA9084.
231. Ang KK, Byers RM, Peters LJ*, et al.* Regional radiotherapy as adjuvant treatment for head and neck malignant melanoma. Preliminary results. *Arch Otolaryngol Head Neck Surg* 1990;116:169-172.
232. Cascinelli N, Morabito A, Santinami M*, et al.* Immediate or delayed dissection of regional nodes in patients with melanoma of the trunk: a randomised trial. WHO Melanoma Programme. *Lancet* 1998;351:793-796.
233. Olivier KR, Schild SE, Morris CG*, et al.* A higher radiotherapy dose is associated with more durable palliation and longer survival in patients with metastatic melanoma. *Cancer* 2007;110:1791-1795.
234. National Health and Medical Research Council. Clinical practice guidelines for the prevention, diagnosis and management of lung cancer. . Sydney: The Cancer Council Australia and Australian Cancer Network; 2004.
235. National Comprehensive Cancer Network. NCCN Clinical Practice Guidelines in Oncology: Small Cell Lung Cancer Version 1.2011: www.nccn.org; 2011. Accessed 30/12/2010.
236. National Cancer Institute. PDQ Summary: Small Cell Lung Cancer Treatment: www.cancer.gov; 2010. Accessed 30/12/2010.
237. British Columbia Cancer Agency. Cancer Management Guidelines: Lung Cancer: www.bccancer.bc.ca; 2008. Accessed 20/9/2011.

238. National Institute for Clinical Excellence. Clinical guideline 24. Lung cancer: the diagnosis and treatment of lung cancer: www.nice.org.uk/CG024NICEguideline; 2005. Accessed 30/12/2010.
239. Scottish Intercollegiate Guidelines Network. Management of patients with lung cancer. A national clinical guideline (report no.80): http://www.sign.ac.uk/pdf/sign80.pdf; 2005. Accessed 20/9/2011.
240. National Comprehensive Cancer Network. NCCN Clinical Practice Guidelines in Oncology: Non-Small Cell Lung Cancer Version 2.2011: www.nccn.org; 2011. Accessed 30/12/2010.
241. Okawara G, Mackay JA, Evans WK*, et al.* Management of unresected stage III non-small cell lung cancer: A clinical practice guideline. Evidence-based series #7-3 (Version 2.2005): section 1. A Quality Initiative of the Program in Evidence-based Care (PEBC), Cancer Care Ontario (CCO). : http://www.cancercare.on.ca; 2006. Accessed 20/9/2011.
242. Turrisi AT, 3rd, Kim K, Blum R*, et al.* Twice-daily compared with once-daily thoracic radiotherapy in limited small-cell lung cancer treated concurrently with cisplatin and etoposide. *N Engl J Med* 1999;340:265-271.
243. Roth BJ, Johnson DH, Einhorn LH*, et al.* Randomized study of cyclophosphamide, doxorubicin, and vincristine versus etoposide and cisplatin versus alternation of these two regimens in extensive small-cell lung cancer: a phase III trial of the Southeastern Cancer Study Group. *J Clin Oncol* 1992;10:282-291.
244. Estall V, Barton MB, Vinod SK. Patterns of radiotherapy re-treatment in patients with lung cancer: a retrospective, longitudinal study. *J Thorac Oncol* 2007;2:531-536.
245. Delaney G, Barton M, Jacob S*, et al.* A model for decision making for the use of radiotherapy in lung cancer. *Lancet Oncol* 2003;4:120-128.
246. National Cancer Institute. PDQ Summary: Non-Small Cell Lung Cancer Treatment: www.cancer.gov; 2010. Accessed 30/12/2010.
247. Okawara G, Ung YC, Markman BR*, et al.* Postoperative adjuvant radiation therapy in stage II or IIIA completely resected non-small cell lung cancer: Practice guideline report #7-1-1 (Version 2.2005). Program

in Evidence-based Care (PEBC), Cancer Care Ontario (CCO). : http://www.cancercare.on.ca; 2005. Accessed 20/9/2011.

248. Alam N, Shepherd FA, Darling G*, et al.* Postoperative adjuvant chemotherapy, with or without radiotherapy, in completely resected non-small cell lung cancer: A clinical practice guideline. Evidence-based series #7-1-2: section 1. A Quality Initiative of the Program in Evidence-based Care (PEBC), Cancer Care Ontario (CCO). : http://www.cancercare.on.ca; 2006.

249. A Medical Research Council (MRC) randomised trial of palliative radiotherapy with two fractions or a single fraction in patients with inoperable non-small-cell lung cancer (NSCLC) and poor performance status. Medical Research Council Lung Cancer Working Party. *Br J Cancer* 1992;65:934-941.

250. Inoperable non-small-cell lung cancer (NSCLC): a Medical Research Council randomised trial of palliative radiotherapy with two fractions or ten fractions. Report to the Medical Research Council by its Lung Cancer Working Party. *Br J Cancer* 1991;63:265-270.

251. Rees GJ, Devrell CE, Barley VL*, et al.* Palliative radiotherapy for lung cancer: two versus five fractions. *Clin Oncol (R Coll Radiol)* 1997;9:90-95.

252. Macbeth FR, Bolger JJ, Hopwood P*, et al.* Randomized trial of palliative two-fraction versus more intensive 13-fraction radiotherapy for patients with inoperable non-small cell lung cancer and good performance status. Medical Research Council Lung Cancer Working Party. *Clin Oncol (R Coll Radiol)* 1996;8:167-175.

253. Bezjak A, Dixon P, Brundage M*, et al.* Randomized phase III trial of single versus fractionated thoracic radiation in the palliation of patients with lung cancer (NCIC CTG SC.15). *Int J Radiat Oncol Biol Phys* 2002;54:719-728.

254. Perez CA, Stanley K, Rubin P*, et al.* A prospective randomized study of various irradiation doses and fractionation schedules in the treatment of inoperable non-oat-cell carcinoma of the lung. Preliminary report by the Radiation Therapy Oncology Group. *Cancer* 1980;45:2744-2753.

255. Saunders M, Dische S, Barrett A*, et al.* Continuous, hyperfractionated, accelerated radiotherapy (CHART) versus conventional radiotherapy in non-small cell lung cancer: mature data from the randomised multicentre trial. CHART Steering committee. *Radiother Oncol* 1999;52:137-148.
256. National Comprehensive Cancer Network. NCCN Clinical Practice Guidelines in Oncology: Malignant Pleural Mesothelioma Version 1.2011: www.nccn.org; 2010. Accessed 30/12/2010.
257. National Cancer Institute. PDQ Summary: Malignant Mesothelioma: www.cancer.gov; 2010. Accessed 31/12/2010.
258. British Columbia Cancer Agency. Cancer Management Guidelines: Lung (Mesothelioma): www.bccancer.bc.ca; 2005. Accessed 29/3/2012.
259. Ung YC, Yu E, Falkson C*, et al.* The Role of Radiation Therapy in Malignant Pleural Mesothelioma: A Clinical Practice Guideline: Evidence-Based Series #7-14-3. Program in Evidence-based Care (PEBC), Cancer Care Ontario (CCO). : http://www.cancercare.on.ca; 2006. Accessed 29/3/2012.
260. National Health and Medical Research Council. Clinical practice guidelines for the diagnosis and management of lymphoma. Sydney: The Cancer Council Australia and Australian Cancer Network; 2005.
261. National Comprehensive Cancer Network. NCCN Clinical Practice Guidelines in Oncology: Hodgkin Lymphoma Version 2.2010: www.nccn.org; 2010. Accessed 30/12/2010.
262. National Cancer Institute. PDQ Summary: Adult Hodgkin Lymphoma: www.cancer.gov; 2010. Accessed 31/12/2010.
263. Mundt AJ, Sibley G, Williams S*, et al.* Patterns of failure following high-dose chemotherapy and autologous bone marrow transplantation with involved field radiotherapy for relapsed/refractory Hodgkin's disease. *Int J Radiat Oncol Biol Phys* 1995;33:261-270.
264. Poen JC, Hoppe RT, Horning SJ. High-dose therapy and autologous bone marrow transplantation for relapsed/refractory Hodgkin's disease: the impact of involved field radiotherapy on patterns of failure and survival. *Int J Radiat Oncol Biol Phys* 1996;36:3-12.
265. Josting A, Nogova L, Franklin J*, et al.* Salvage radiotherapy in patients with relapsed and refractory Hodgkin's lymphoma: a retrospective

analysis from the German Hodgkin Lymphoma Study Group. *J Clin Oncol* 2005;23:1522-1529.

266. National Comprehensive Cancer Network. NCCN Clinical Practice Guidelines in Oncology: Non-Hodgkin's Lymphomas Version 1.2011: www.nccn.org; 2010. Accessed 30/12/2010.
267. Lowry L, Smith P, Qian W*, et al.* Reduced dose radiotherapy for local control in non-Hodgkin lymphoma: a randomised phase III trial. *Radiother Oncol* 2011;100:86-92.
268. Philip T, Guglielmi C, Hagenbeek A*, et al.* Autologous bone marrow transplantation as compared with salvage chemotherapy in relapses of chemotherapy-sensitive non-Hodgkin's lymphoma. *N Engl J Med* 1995;333:1540-1545.
269. Aviles A, Neri N, Delgado S*, et al.* Residual disease after chemotherapy in aggressive malignant lymphoma: the role of radiotherapy. *Med Oncol* 2005;22:383-387.
270. Laver JH, Barredo JC, Amylon M*, et al.* Effects of cranial radiation in children with high risk T cell acute lymphoblastic leukemia: a Pediatric Oncology Group report. *Leukemia* 2000;14:369-373.
271. Featherstone C, Delaney G, Jacob S*, et al.* Estimating the optimal utilization rates of radiotherapy for hematologic malignancies from a review of the evidence: part I-lymphoma. *Cancer* 2005;103:383-392.
272. National Cancer Institute. PDQ Summary: Adult Non-Hodgkin Lymphoma: www.cancer.gov; 2010. Accessed 31/12/2010.
273. National Cancer Institute. PDQ Summary: Mycosis Fungoides and the Sezary Syndrome: www.cancer.gov; 2010. Accessed 31/12/2010.
274. British Columbia Cancer Agency. Cancer Management Guidelines: Lymphoma: www.bccancer.bc.ca; 2010. Accessed 30/12/2010.
275. Engert A, Plutschow A, Eich HT*, et al.* Reduced treatment intensity in patients with early-stage Hodgkin's lymphoma. *N Engl J Med* 2010;363:640-652.
276. Eich HT, Diehl V, Gorgen H*, et al.* Intensified chemotherapy and dose-reduced involved-field radiotherapy in patients with early unfavorable Hodgkin's lymphoma: final analysis of the German Hodgkin Study Group HD11 trial. *J Clin Oncol* 2010;28:4199-4206.

277. Fabian CJ, Mansfield CM, Dahlberg S*, et al.* Low-dose involved field radiation after chemotherapy in advanced Hodgkin disease. A Southwest Oncology Group randomized study. *Ann Intern Med* 1994;120:903-912.
278. Aleman BM, Raemaekers JM, Tomisic R*, et al.* Involved-field radiotherapy for patients in partial remission after chemotherapy for advanced Hodgkin's lymphoma. *Int J Radiat Oncol Biol Phys* 2007;67:19-30.
279. Aleman BM, Raemaekers JM, Tirelli U*, et al.* Involved-field radiotherapy for advanced Hodgkin's lymphoma. *N Engl J Med* 2003;348:2396-2406.
280. Kamath SS, Marcus RB, Jr., Lynch JW*, et al.* The impact of radiotherapy dose and other treatment-related and clinical factors on in-field control in stage I and II non-Hodgkin's lymphoma. *Int J Radiat Oncol Biol Phys* 1999;44:563-568.
281. Wilson LD, Kacinski BM, Jones GW. Local superficial radiotherapy in the management of minimal stage IA cutaneous T-cell lymphoma (Mycosis Fungoides). *Int J Radiat Oncol Biol Phys* 1998;40:109-115.
282. Micaily B, Miyamoto C, Kantor G*, et al.* Radiotherapy for unilesional mycosis fungoides. *Int J Radiat Oncol Biol Phys* 1998;42:361-364.
283. Chinn DM, Chow S, Kim YH*, et al.* Total skin electron beam therapy with or without adjuvant topical nitrogen mustard or nitrogen mustard alone as initial treatment of T2 and T3 mycosis fungoides. *Int J Radiat Oncol Biol Phys* 1999;43:951-958.
284. Ysebaert L, Truc G, Dalac S*, et al.* Ultimate results of radiation therapy for T1-T2 mycosis fungoides (including reirradiation). *Int J Radiat Oncol Biol Phys* 2004;58:1128-1134.
285. Quiros PA, Jones GW, Kacinski BM*, et al.* Total skin electron beam therapy followed by adjuvant psoralen/ultraviolet-A light in the management of patients with T1 and T2 cutaneous T-cell lymphoma (mycosis fungoides). *Int J Radiat Oncol Biol Phys* 1997;38:1027-1035.
286. Greater Metropolitan Clinical Taskforce. Best clinical practice gynaecological cancer guidelines 2009. North Sydney, NSW: NSW Department of Health; 2009.

287. National Comprehensive Cancer Network. NCCN Clinical Practice Guidelines in Oncology: Cervical Cancer Version 1.2011: www.nccn.org; 2010. Accessed 30/12/2010.
288. National Cancer Institute. PDQ Summary: Cervical Cancer Treatment: www.cancer.gov; 2010. Accessed 31/12/2010.
289. British Columbia Cancer Agency. Cancer Management Guidelines: Gynecology (Uterine Cervix): www.bccancer.bc.ca; 2008. Accessed 13/10/2011.
290. Thomas GM, Dembo AJ, Black B*, et al.* Concurrent radiation and chemotherapy for carcinoma of the cervix recurrent after radical surgery. *Gynecol Oncol* 1987;27:254-263.
291. Thomas GM, Dembo AJ, Myhr T*, et al.* Long-term results of concurrent radiation and chemotherapy for carcinoma of the cervix recurrent after surgery. *Int J Gynecol Cancer* 1993;3:193-198.
292. Ijaz T, Eifel PJ, Burke T*, et al.* Radiation therapy of pelvic recurrence after radical hysterectomy for cervical carcinoma. *Gynecol Oncol* 1998;70:241-246.
293. Larson DM, Copeland LJ, Stringer CA*, et al.* Recurrent cervical carcinoma after radical hysterectomy. *Gynecol Oncol* 1988;30:381-387.
294. Maneo A, Landoni F, Cormio G*, et al.* Concurrent carboplatin/5-fluorouracil and radiotherapy for recurrent cervical carcinoma. *Ann Oncol* 1999;10:803-807.
295. Onsrud M, Hagen B, Strickert T. 10-Gy single-fraction pelvic irradiation for palliation and life prolongation in patients with cancer of the cervix and corpus uteri. *Gynecol Oncol* 2001;82:167-171.
296. Jain P, Hunter RD, Livsey JE*, et al.* Salvaging locoregional recurrence with radiotherapy after surgery in early cervical cancer. *Clin Oncol (R Coll Radiol)* 2007;19:763-768.
297. Roila F, Lupattelli M, Sassi M*, et al.* Intra and interobserver variability in cancer patients' performance status assessed according to Karnofsky and ECOG scales. *Ann Oncol* 1991;2:437-439.
298. Saphner T, Gallion HH, Van Nagell JR*, et al.* Neurologic complications of cervical cancer. A review of 2261 cases. *Cancer* 1989;64:1147-1151.

299. Delaney G, Jacob S, Barton M. Estimation of an optimal radiotherapy utilization rate for gynecologic carcinoma: part I--malignancies of the cervix, ovary, vagina and vulva. *Cancer* 2004;101:671-681.
300. Scottish Intercollegiate Guidelines Network. Management of cervical cancer. A national clinical guideline (report no.99): http://www.sign.ac.uk/pdf/sign99.pdf; 2008. Accessed 13/10/2011.
301. Lukka H, Hirte H, Fyles A*, et al.* Primary Treatment for Locally Advanced Cervical Cancer: Concurrent Platinum-based Chemotherapy and Radiation. Practice Guideline Report #4-5. Program in Evidence-based Care (PEBC), Cancer Care Ontario (CCO). http://www.cancercare.on.ca; 2004. Accessed 13/10/2011
302. Benedet JL, Bender H, Jones H, 3rd*, et al.* FIGO staging classifications and clinical practice guidelines in the management of gynecologic cancers. FIGO Committee on Gynecologic Oncology. *Int J Gynaecol Obstet* 2000;70:209-262.
303. Sedlis A, Bundy BN, Rotman MZ*, et al.* A randomized trial of pelvic radiation therapy versus no further therapy in selected patients with stage IB carcinoma of the cervix after radical hysterectomy and pelvic lymphadenectomy: A Gynecologic Oncology Group Study. *Gynecol Oncol* 1999;73:177-183.
304. Rotman M, Sedlis A, Piedmonte MR*, et al.* A phase III randomized trial of postoperative pelvic irradiation in Stage IB cervical carcinoma with poor prognostic features: follow-up of a gynecologic oncology group study. *Int J Radiat Oncol Biol Phys* 2006;65:169-176.
305. Peters WA, 3rd, Liu PY, Barrett RJ, 2nd*, et al.* Concurrent chemotherapy and pelvic radiation therapy compared with pelvic radiation therapy alone as adjuvant therapy after radical surgery in high-risk early-stage cancer of the cervix. *J Clin Oncol* 2000;18:1606-1613.
306. Keys HM, Bundy BN, Stehman FB*, et al.* Cisplatin, radiation, and adjuvant hysterectomy compared with radiation and adjuvant hysterectomy for bulky stage IB cervical carcinoma. *N Engl J Med* 1999;340:1154-1161.

307. Morris M, Eifel PJ, Lu J*, et al.* Pelvic radiation with concurrent chemotherapy compared with pelvic and para-aortic radiation for high-risk cervical cancer. *N Engl J Med* 1999;340:1137-1143.
308. Whitney CW, Sause W, Bundy BN*, et al.* Randomized comparison of fluorouracil plus cisplatin versus hydroxyurea as an adjunct to radiation therapy in stage IIB-IVA carcinoma of the cervix with negative para-aortic lymph nodes: a Gynecologic Oncology Group and Southwest Oncology Group study. *J Clin Oncol* 1999;17:1339-1348.
309. Rose PG, Bundy BN, Watkins EB*, et al.* Concurrent cisplatin-based radiotherapy and chemotherapy for locally advanced cervical cancer. *N Engl J Med* 1999;340:1144-1153.
310. Thomas GM. Improved treatment for cervical cancer--concurrent chemotherapy and radiotherapy. *N Engl J Med* 1999;340:1198-1200.
311. van Lonkhuijzen L, Thomas G. Palliative radiotherapy for cervical carcinoma, a systematic review. *Radiother Oncol* 2011;98:287-291.
312. National Comprehensive Cancer Network. NCCN Clinical Practice Guidelines in Oncology: Uterine Neoplasms Version 1.2011: www.nccn.org; 2010. Accessed 30/12/2010.
313. Salvesen HB, Akslen LA, Iversen T*, et al.* Recurrence of endometrial carcinoma and the value of routine follow up. *Br J Obstet Gynaecol* 1997;104:1302-1307.
314. Delaney G, Jacob S, Barton M. Estimation of an optimal radiotherapy utilization rate for gynecologic carcinoma: part II--carcinoma of the endometrium. *Cancer* 2004;101:682-692.
315. National Cancer Institute. PDQ Summary: Endometrial Cancer Treatment: www.cancer.gov; 2010. Accessed 31/12/2010.
316. British Columbia Cancer Agency. Cancer Management Guidelines: Gynecology (Endometrium): www.bccancer.bc.ca; 2010. Accessed 30/12/2010.
317. Lukka H, Chambers A, Fyles A*, et al.* Adjuvant Radiotherapy in Women with Stage I Endometrial Cancer: A Clinical Practice Guideline. Practice Guideline Report #4-10. Program in Evidence-based Care (PEBC), Cancer Care Ontario (CCO). http://www.cancercare.on.ca; 2006. Accessed 28/10/2011

318. Creutzberg CL, van Putten WL, Koper PC*, et al.* Surgery and postoperative radiotherapy versus surgery alone for patients with stage-1 endometrial carcinoma: multicentre randomised trial. PORTEC Study Group. Post Operative Radiation Therapy in Endometrial Carcinoma. *Lancet* 2000;355:1404-1411.
319. Creutzberg CL, van Putten WL, Warlam-Rodenhuis CC*, et al.* Outcome of high-risk stage IC, grade 3, compared with stage I endometrial carcinoma patients: the Postoperative Radiation Therapy in Endometrial Carcinoma Trial. *J Clin Oncol* 2004;22:1234-1241.
320. Scholten AN, van Putten WL, Beerman H*, et al.* Postoperative radiotherapy for Stage 1 endometrial carcinoma: long-term outcome of the randomized PORTEC trial with central pathology review. *Int J Radiat Oncol Biol Phys* 2005;63:834-838.
321. Keys HM, Roberts JA, Brunetto VL*, et al.* A phase III trial of surgery with or without adjunctive external pelvic radiation therapy in intermediate risk endometrial adenocarcinoma: a Gynecologic Oncology Group study. *Gynecol Oncol* 2004;92:744-751.
322. Jhingran A, Burke TW, Eifel PJ. Definitive radiotherapy for patients with isolated vaginal recurrence of endometrial carcinoma after hysterectomy. *Int J Radiat Oncol Biol Phys* 2003;56:1366-1372.
323. Susumu N, Sagae S, Udagawa Y*, et al.* Randomized phase III trial of pelvic radiotherapy versus cisplatin-based combined chemotherapy in patients with intermediate- and high-risk endometrial cancer: a Japanese Gynecologic Oncology Group study. *Gynecol Oncol* 2008;108:226-233.
324. Corn BW, Lanciano RM, Boente M*, et al.* Recurrent ovarian cancer. Effective radiotherapeutic palliation after chemotherapy failure. *Cancer* 1994;74:2979-2983.
325. E C, Quon M, Gallant V*, et al.* Effective palliative radiotherapy for symptomatic recurrent or residual ovarian cancer. *Gynecol Oncol* 2006;102:204-209.
326. Dauplat J, Hacker NF, Nieberg RK*, et al.* Distant metastases in epithelial ovarian carcinoma. *Cancer* 1987;60:1561-1566.
327. The Australian Cancer Network and National Breast Cancer Centre. Clinical practice guidelines for the management of women with epithelial

ovarian cancer. Camperdown, NSW: National Breast Cancer Centre; 2004.

328. Scottish Intercollegiate Guidelines Network. Epithelial ovarian cancer. A national clinical guideline (report no.75): http://www.sign.ac.uk/pdf/sign75.pdf; 2003. Accessed 24/10/2011.

329. National Comprehensive Cancer Network. NCCN Clinical Practice Guidelines in Oncology: Ovarian Cancer Version 2.2011: www.nccn.org; 2010. Accessed 30/12/2010.

330. National Cancer Institute. PDQ Summary: Ovarian Epithelial Cancer Treatment: www.cancer.gov; 2010. Accessed 31/12/2010.

331. British Columbia Cancer Agency. Cancer Management Guidelines: Gynecology (Epithelial Carcinoma of the Ovary): www.bccancer.bc.ca; 2007. Accessed 25/10/2011.

332. Hruby G, MacLeod C, Firth I. Radiation treatment in recurrent squamous cell cancer of the vulva. *Int J Radiat Oncol Biol Phys* 2000;46:1193-1197.

333. Piura B, Masotina A, Murdoch J*, et al.* Recurrent squamous cell carcinoma of the vulva: a study of 73 cases. *Gynecol Oncol* 1993;48:189-195.

334. National Cancer Institute. PDQ Summary: Vulvar Cancer Treatment: www.cancer.gov; 2010. Accessed 31/12/2010.

335. British Columbia Cancer Agency. Cancer Management Guidelines: Gynecology (Vulva): www.bccancer.bc.ca; 2010. Accessed 30/12/2010.

336. Homesley HD, Bundy BN, Sedlis A*, et al.* Radiation therapy versus pelvic node resection for carcinoma of the vulva with positive groin nodes. *Obstet Gynecol* 1986;68:733-740.

337. Russell AH, Mesic JB, Scudder SA*, et al.* Synchronous radiation and cytotoxic chemotherapy for locally advanced or recurrent squamous cancer of the vulva. *Gynecol Oncol* 1992;47:14-20.

338. Berek JS, Heaps JM, Fu YS*, et al.* Concurrent cisplatin and 5-fluorouracil chemotherapy and radiation therapy for advanced-stage squamous carcinoma of the vulva. *Gynecol Oncol* 1991;42:197-201.

339. Koh WJ, Wallace HJ, 3rd, Greer BE*, et al.* Combined radiotherapy and chemotherapy in the management of local-regionally advanced vulvar cancer. *Int J Radiat Oncol Biol Phys* 1993;26:809-816.

340. Thomas G, Dembo A, DePetrillo A*, et al.* Concurrent radiation and chemotherapy in vulvar carcinoma. *Gynecol Oncol* 1989;34:263-267.
341. Hacker NF, Berek JS, Lagasse LD*, et al.* Individualization of treatment for stage I squamous cell vulvar carcinoma. *Obstet Gynecol* 1984;63:155-162.
342. Stock RG, Chen AS, Seski J. A 30-year experience in the management of primary carcinoma of the vagina: analysis of prognostic factors and treatment modalities. *Gynecol Oncol* 1995;56:45-52.
343. British Columbia Cancer Agency. Cancer Management Guidelines: Gynecology (Vagina): www.bccancer.bc.ca; 2010. Accessed 25/10/2011.
344. National Cancer Institute. PDQ Summary: Vaginal Cancer Treatment: www.cancer.gov; 2010. Accessed 31/12/2010.
345. Thompson SR, Delaney GP, Gabriel GS*, et al.* Estimation of the optimal brachytherapy utilisation rate in the treatment of vaginal cancer and comparison with patterns of care. *J Med Imaging Radiat Oncol* 2012 (accepted for publication).
346. Perez CA, Grigsby PW, Garipagaoglu M*, et al.* Factors affecting long-term outcome of irradiation in carcinoma of the vagina. *Int J Radiat Oncol Biol Phys* 1999;44:37-45.
347. Perez CA, Camel HM, Galakatos AE*, et al.* Definitive irradiation in carcinoma of the vagina: long-term evaluation of results. *Int J Radiat Oncol Biol Phys* 1988;15:1283-1290.
348. British Columbia Cancer Agency. Cancer Management Guidelines: Primary Unknown Cancer: www.bccancer.bc.ca; 2005. Accessed 23/11/2011.
349. Delaney G, Jacob S, Barton M. Estimating the optimal radiotherapy utilization for carcinoma of the central nervous system, thyroid carcinoma, and carcinoma of unknown primary origin from evidence-based clinical guidelines. *Cancer* 2006;106:453-465.
350. Hillen HF. Unknown primary tumours. *Postgrad Med J* 2000;76:690-693.
351. National Comprehensive Cancer Network. NCCN Clinical Practice Guidelines in Oncology: Head and Neck Cancers Version 2.2010: www.nccn.org; 2010. Accessed 30/12/2010.

352. National Institute for Clinical Excellence. Metastatic Malignant Disease of Unknown Primary Origin: Diagnosis and Management of Metastatic Malignant Disease of Unknown Primary Origin: www.nice.org.uk/guidance/CG104; 2010. Accessed 23/11/2011.
353. National Comprehensive Cancer Network. NCCN Clinical Practice Guidelines in Oncology: Occult Primary (Cancer of Unknown Primary) Version 2.2011: www.nccn.org; 2010. Accessed 30/12/2010.
354. National Cancer Institute. PDQ Summary: Carcinoma of Unknown Primary Treatment: www.cancer.gov; 2010. Accessed 31/12/2010.
355. Scottish Intercollegiate Guidelines Network. Diagnosis and management of head and neck cancer. A national clinical guideline (report no.90): http://www.sign.ac.uk/pdf/sign90.pdf; 2006. Accessed 2/11/2011.
356. Gilbert R, Devries-Aboud M, Winquist E*, et al.* The management of head and neck cancer in Ontario: Organizational and clinical practice guideline recommendations. Evidence-based series #5-3. Program in Evidence-based Care (PEBC), Cancer Care Ontario (CCO). http://www.cancercare.on.ca; 2009. Accessed 2/11/2011.
357. British Columbia Cancer Agency. Cancer Management Guidelines: Head and Neck Cancer: www.bccancer.bc.ca; 2003. Accessed 2/11/2011.
358. Hodson DI, Archibald S, Browman GP*, et al.* Optimum radiation fractionation for T1 N0 glottic (vocal cord) carcinoma. Evidence summary report #5-4. Program in Evidence-based Care (PEBC), Cancer Care Ontario (CCO). http://www.cancercare.on.ca; 2005. Accessed 2/11/2011.
359. Wolfensberger M, Zbaeren P, Dulguerov P*, et al.* Surgical treatment of early oral carcinoma-results of a prospective controlled multicenter study. *Head Neck* 2001;23:525-530.
360. SA Cancer Registry. Epidemiology of cancer in South Australia. September 2000 (Cancer Series No 22). Adelaide: South Australian Cancer Registry; 2000
361. List MA, D'Antonio LL, Cella DF*, et al.* The Performance Status Scale for Head and Neck Cancer Patients and the Functional Assessment of Cancer Therapy-Head and Neck Scale. A study of utility and validity. *Cancer* 1996;77:2294-2301.

362. Hinerman RW, Mendenhall WM, Amdur RJ*, et al.* Carcinoma of the supraglottic larynx: treatment results with radiotherapy alone or with planned neck dissection. *Head Neck* 2002;24:456-467.
363. Sundaram K, Schwartz J, Har-El G*, et al.* Carcinoma of the oropharynx: factors affecting outcome. *Laryngoscope* 2005;115:1536-1542.
364. Hoffman HT, Karnell LH, Shah JP*, et al.* Hypopharyngeal cancer patient care evaluation. *Laryngoscope* 1997;107:1005-1017.
365. Dulguerov P, Jacobsen MS, Allal AS*, et al.* Nasal and paranasal sinus carcinoma: are we making progress? A series of 220 patients and a systematic review. *Cancer* 2001;92:3012-3029.
366. Delaney G, Jacob S, Barton M. Estimation of an optimal external beam radiotherapy utilization rate for head and neck carcinoma. *Cancer* 2005;103:2216-2227.
367. National Cancer Institute. PDQ Summary: Laryngeal Cancer Treatment: www.cancer.gov; 2010. Accessed 31/12/2010.
368. National Cancer Institute. PDQ Summary: Lip and Oral Cavity Cancer Treatment: www.cancer.gov; 2010. Accessed 31/12/2010.
369. National Cancer Institute. PDQ Summary: Oropharyngeal Cancer Treatment: www.cancer.gov; 2010. Accessed 31/12/2010.
370. National Cancer Institute. PDQ Summary: Nasopharyngeal Cancer Treatment: www.cancer.gov; 2010. Accessed 31/12/2010.
371. National Cancer Institute. PDQ Summary: Metastatic Squamous Neck Cancer with Occult Primary Treatment: www.cancer.gov; 2010. Accessed 31/12/2010.
372. Head and Neck Cancer Disease Site Group. Hyperfractionated radiotherapy for locally advanced squamous cell carcinoma of the head and neck. Practice guideline report #5-6b. Program in Evidence-based Care (PEBC), Cancer Care Ontario (CCO). http://www.cancercare.on.ca; 2003. Accessed 2/11/2011.
373. Head and Neck Cancer Disease Site Group. Accelerated radiotherapy for locally advanced squamous cell carcinoma of the head and neck. Practice guideline report #5-6c. Program in Evidence-based Care (PEBC), Cancer Care Ontario (CCO). http://www.cancercare.on.ca; 2002. Accessed 2/11/2011.

374. Thephamongkhol K, Browman G, Hodson I, *et al.* Chemotherapy with radiotherapy for nasopharyngeal Cancer: A clinical practice guideline. Evidence-based series #5-7. Program in Evidence-based Care (PEBC), Cancer Care Ontario (CCO). http://www.cancercare.on.ca; 2004. Accessed 2/11/2011.
375. Winquist E, Oliver T, Gilbert R, *et al.* The Role of Postoperative Chemoradiotherapy for Advanced Squamous Cell Carcinoma of the Head and Neck: A Clinical Practice Guideline. Evidence-based Series #5-10. Program in Evidence-based Care (PEBC), Cancer Care Ontario (CCO). http://www.cancercare.on.ca; 2004. Accessed 2/11/2011.
376. Adelstein DJ, Li Y, Adams GL, *et al.* An intergroup phase III comparison of standard radiation therapy and two schedules of concurrent chemoradiotherapy in patients with unresectable squamous cell head and neck cancer. *J Clin Oncol* 2003;21:92-98.
377. Overgaard J, Hansen HS, Specht L, *et al.* Five compared with six fractions per week of conventional radiotherapy of squamous-cell carcinoma of head and neck: DAHANCA 6 and 7 randomised controlled trial. *Lancet* 2003;362:933-940.
378. Fu KK, Pajak TF, Trotti A, *et al.* A Radiation Therapy Oncology Group (RTOG) phase III randomized study to compare hyperfractionation and two variants of accelerated fractionation to standard fractionation radiotherapy for head and neck squamous cell carcinomas: first report of RTOG 9003. *Int J Radiat Oncol Biol Phys* 2000;48:7-16.
379. Gowda RV, Henk JM, Mais KL, *et al.* Three weeks radiotherapy for T1 glottic cancer: the Christie and Royal Marsden Hospital Experience. *Radiother Oncol* 2003;68:105-111.
380. Yamazaki H, Nishiyama K, Tanaka E, *et al.* Radiotherapy for early glottic carcinoma (T1N0M0): results of prospective randomized study of radiation fraction size and overall treatment time. *Int J Radiat Oncol Biol Phys* 2006;64:77-82.
381. Bernier J, Domenge C, Ozsahin M, *et al.* Postoperative irradiation with or without concomitant chemotherapy for locally advanced head and neck cancer. *N Engl J Med* 2004;350:1945-1952.

382. Cooper JS, Pajak TF, Forastiere AA*, et al.* Postoperative concurrent radiotherapy and chemotherapy for high-risk squamous-cell carcinoma of the head and neck. *N Engl J Med* 2004;350:1937-1944.
383. Orus C, Leon X, Vega M*, et al.* Initial treatment of the early stages (I, II) of supraglottic squamous cell carcinoma: partial laryngectomy versus radiotherapy. *Eur Arch Otorhinolaryngol* 2000;257:512-516.
384. Nguyen-Tan PF, Le QT, Quivey JM*, et al.* Treatment results and prognostic factors of advanced T3--4 laryngeal carcinoma: the University of California, San Francisco (UCSF) and Stanford University Hospital (SUH) experience. *Int J Radiat Oncol Biol Phys* 2001;50:1172-1180.
385. Veness MJ, Ong C, Cakir B*, et al.* Squamous cell carcinoma of the lip. Patterns of relapse and outcome: Reporting the Westmead Hospital experience, 1980-1997. *Australas Radiol* 2001;45:195-199.
386. McCombe D, MacGill K, Ainslie J*, et al.* Squamous cell carcinoma of the lip: a retrospective review of the Peter MacCallum Cancer Institute experience 1979-88. *Aust N Z J Surg* 2000;70:358-361.
387. Terhaard CH, Lubsen H, Rasch CR*, et al.* The role of radiotherapy in the treatment of malignant salivary gland tumors. *Int J Radiat Oncol Biol Phys* 2005;61:103-111.
388. Storey MR, Garden AS, Morrison WH*, et al.* Postoperative radiotherapy for malignant tumors of the submandibular gland. *Int J Radiat Oncol Biol Phys* 2001;51:952-958.
389. Armstrong JG, Harrison LB, Spiro RH*, et al.* Malignant tumors of major salivary gland origin. A matched-pair analysis of the role of combined surgery and postoperative radiotherapy. *Arch Otolaryngol Head Neck Surg* 1990;116:290-293.
390. North CA, Lee DJ, Piantadosi S*, et al.* Carcinoma of the major salivary glands treated by surgery or surgery plus postoperative radiotherapy. *Int J Radiat Oncol Biol Phys* 1990;18:1319-1326.
391. Blanco AI, Chao KS, Ozyigit G*, et al.* Carcinoma of paranasal sinuses: long-term outcomes with radiotherapy. *Int J Radiat Oncol Biol Phys* 2004;59:51-58.

392. Jansen EP, Keus RB, Hilgers FJ*, et al.* Does the combination of radiotherapy and debulking surgery favor survival in paranasal sinus carcinoma? *Int J Radiat Oncol Biol Phys* 2000;48:27-35.
393. Porceddu S, Martin J, Shanker G*, et al.* Paranasal sinus tumors: Peter MacCallum Cancer Institute experience. *Head Neck* 2004;26:322-330.
394. Hicsonmez A, Andrieu MN, Karaca M*, et al.* Treatment outcome of nasal and paranasal sinus carcinoma. *J Otolaryngol* 2005;34:379-383.
395. Xiao WW, Han F, Lu TX*, et al.* Treatment outcomes after radiotherapy alone for patients with early-stage nasopharyngeal carcinoma. *Int J Radiat Oncol Biol Phys* 2009;74:1070-1076.
396. Hoppe RT, Goffinet DR, Bagshaw MA. Carcinoma of the nasopharynx. Eighteen years' experience with megavoltage radiation therapy. *Cancer* 1976;37:2605-2612.
397. Al-Sarraf M, LeBlanc M, Giri PG*, et al.* Chemoradiotherapy versus radiotherapy in patients with advanced nasopharyngeal cancer: phase III randomized Intergroup study 0099. *J Clin Oncol* 1998;16:1310-1317.
398. Wee J, Tan EH, Tai BC*, et al.* Randomized trial of radiotherapy versus concurrent chemoradiotherapy followed by adjuvant chemotherapy in patients with American Joint Committee on Cancer/International Union against cancer stage III and IV nasopharyngeal cancer of the endemic variety. *J Clin Oncol* 2005;23:6730-6738.
399. Sinnathamby K, Peters LJ, Laidlaw C*, et al.* The occult head and neck primary: to treat or not to treat? *Clin Oncol (R Coll Radiol)* 1997;9:322-329.
400. Nguyen C, Shenouda G, Black MJ*, et al.* Metastatic squamous cell carcinoma to cervical lymph nodes from unknown primary mucosal sites. *Head Neck* 1994;16:58-63.
401. Erkal HS, Mendenhall WM, Amdur RJ*, et al.* Squamous cell carcinomas metastatic to cervical lymph nodes from an unknown head-and-neck mucosal site treated with radiation therapy alone or in combination with neck dissection. *Int J Radiat Oncol Biol Phys* 2001;50:55-63.
402. Reddy SP, Marks JE. Metastatic carcinoma in the cervical lymph nodes from an unknown primary site: results of bilateral neck plus mucosal

irradiation vs. ipsilateral neck irradiation. *Int J Radiat Oncol Biol Phys* 1997;37:797-802.

403. National Cancer Institute. PDQ Summary: Childhood Acute Lymphoblastic Leukemia Treatment: www.cancer.gov; 2010. Accessed 31/12/2010.

404. Barredo JC, Devidas M, Lauer SJ*, et al.* Isolated CNS relapse of acute lymphoblastic leukemia treated with intensive systemic chemotherapy and delayed CNS radiation: a pediatric oncology group study. *J Clin Oncol* 2006;24:3142-3149.

405. Wofford MM, Smith SD, Shuster JJ*, et al.* Treatment of occult or late overt testicular relapse in children with acute lymphoblastic leukemia: a Pediatric Oncology Group study. *J Clin Oncol* 1992;10:624-630.

406. Davies SM, Ramsay NK, Klein JP*, et al.* Comparison of preparative regimens in transplants for children with acute lymphoblastic leukemia. *J Clin Oncol* 2000;18:340-347.

407. Bunin N, Aplenc R, Kamani N*, et al.* Randomized trial of busulfan vs total body irradiation containing conditioning regimens for children with acute lymphoblastic leukemia: a Pediatric Blood and Marrow Transplant Consortium study. *Bone Marrow Transplant* 2003;32:543-548.

408. Ribera JM, Oriol A, Bethencourt C*, et al.* Comparison of intensive chemotherapy, allogeneic or autologous stem cell transplantation as post-remission treatment for adult patients with high-risk acute lymphoblastic leukemia. Results of the PETHEMA ALL-93 trial. *Haematologica* 2005;90:1346-1356.

409. Cornelissen JJ, van der Holt B, Verhoef GE*, et al.* Myeloablative allogeneic versus autologous stem cell transplantation in adult patients with acute lymphoblastic leukemia in first remission: a prospective sibling donor versus no-donor comparison. *Blood* 2009;113:1375-1382.

410. Attal M, Blaise D, Marit G*, et al.* Consolidation treatment of adult acute lymphoblastic leukemia: a prospective, randomized trial comparing allogeneic versus autologous bone marrow transplantation and testing the impact of recombinant interleukin-2 after autologous bone marrow transplantation. BGMT Group. *Blood* 1995;86:1619-1628.

411. Sebban C, Lepage E, Vernant JP*, et al.* Allogeneic bone marrow transplantation in adult acute lymphoblastic leukemia in first complete remission: a comparative study. French Group of Therapy of Adult Acute Lymphoblastic Leukemia. *J Clin Oncol* 1994;12:2580-2587.
412. Hunault M, Harousseau JL, Delain M*, et al.* Better outcome of adult acute lymphoblastic leukemia after early genoidentical allogeneic bone marrow transplantation (BMT) than after late high-dose therapy and autologous BMT: a GOELAMS trial. *Blood* 2004;104:3028-3037.
413. Clift RA, Buckner CD, Appelbaum FR*, et al.* Allogeneic marrow transplantation in patients with acute myeloid leukemia in first remission: a randomized trial of two irradiation regimens. *Blood* 1990;76:1867-1871.
414. Clift RA, Buckner CD, Appelbaum FR*, et al.* Long-term follow-Up of a randomized trial of two irradiation regimens for patients receiving allogeneic marrow transplants during first remission of acute myeloid leukemia. *Blood* 1998;92:1455-1456.
415. Reiter A, Schrappe M, Ludwig WD*, et al.* Chemotherapy in 998 unselected childhood acute lymphoblastic leukemia patients. Results and conclusions of the multicenter trial ALL-BFM 86. *Blood* 1994;84:3122-3133.
416. Schrappe M, Reiter A, Ludwig WD*, et al.* Improved outcome in childhood acute lymphoblastic leukemia despite reduced use of anthracyclines and cranial radiotherapy: results of trial ALL-BFM 90. German-Austrian-Swiss ALL-BFM Study Group. *Blood* 2000;95:3310-3322.
417. Rivera GK, Pinkel D, Simone JV*, et al.* Treatment of acute lymphoblastic leukemia. 30 years' experience at St. Jude Children's Research Hospital. *N Engl J Med* 1993;329:1289-1295.
418. Kamps WA, Bokkerink JP, Hahlen K*, et al.* Intensive treatment of children with acute lymphoblastic leukemia according to ALL-BFM-86 without cranial radiotherapy: results of Dutch Childhood Leukemia Study Group Protocol ALL-7 (1988-1991). *Blood* 1999;94:1226-1236.
419. Featherstone C, Delaney G, Jacob S*, et al.* Estimating the optimal utilization rates of radiotherapy for hematologic malignancies from a review of the evidence: part II-leukemia and myeloma. *Cancer* 2005;103:393-401.

420. National Comprehensive Cancer Network. NCCN Clinical Practice Guidelines in Oncology: Acute Myeloid Leukemia Version 2.2011: www.nccn.org; 2010. Accessed 30/12/2010.
421. National Comprehensive Cancer Network. NCCN Clinical Practice Guidelines in Oncology: Chronic Myelogenous Leukemia Version 2.2011: www.nccn.org; 2010. Accessed 30/12/2010.
422. National Cancer Institute. PDQ Summary: Childhood Acute Myeloid Leukemia/Other Myeloid Malignancies Treatment: www.cancer.gov; 2010. Accessed 31/12/2010.
423. National Cancer Institute. PDQ Summary: Adult Acute Lymphoblastic Leukemia Treatment: www.cancer.gov; 2010. Accessed 31/12/2010.
424. National Cancer Institute. PDQ Summary: Adult Acute Myeloid Leukemia Treatment: www.cancer.gov; 2010. Accessed 31/12/2010.
425. National Cancer Institute. PDQ Summary: Chronic Lymphocytic Leukemia Treatment: www.cancer.gov; 2010. Accessed 31/12/2010.
426. National Cancer Institute. PDQ Summary: Chronic Myelogenous Leukemia Treatment: www.cancer.gov; 2010. Accessed 31/12/2010.
427. Eapen M, Raetz E, Zhang MJ*, et al.* Outcomes after HLA-matched sibling transplantation or chemotherapy in children with B-precursor acute lymphoblastic leukemia in a second remission: a collaborative study of the Children's Oncology Group and the Center for International Blood and Marrow Transplant Research. *Blood* 2006;107:4961-4967.
428. British Thyroid Association, Royal College of Physicians. Guidelines for the management of thyroid cancer, 2nd edition. Report of the Thyroid Cancer Guidelines Update Group. London; 2007.
429. National Cancer Institute. PDQ Summary: Thyroid Cancer Treatment: www.cancer.gov; 2010. Accessed 31/12/2010.
430. National Comprehensive Cancer Network. NCCN Clinical Practice Guidelines in Oncology: Thyroid Carcinoma Version 1.2011: www.nccn.org; 2010. Accessed 30/12/2010.
431. Wang Y, Tsang R, Asa S*, et al.* Clinical outcome of anaplastic thyroid carcinoma treated with radiotherapy of once- and twice-daily fractionation regimens. *Cancer* 2006;107:1786-1792.

432. Tennvall J, Lundell G, Hallquist A*, et al.* Combined doxorubicin, hyperfractionated radiotherapy, and surgery in anaplastic thyroid carcinoma. Report on two protocols. The Swedish Anaplastic Thyroid Cancer Group. *Cancer* 1994;74:1348-1354.
433. Tennvall J, Lundell G, Wahlberg P*, et al.* Anaplastic thyroid carcinoma: three protocols combining doxorubicin, hyperfractionated radiotherapy and surgery. *Br J Cancer* 2002;86:1848-1853.
434. Kebebew E, Greenspan FS, Clark OH*, et al.* Anaplastic thyroid carcinoma. Treatment outcome and prognostic factors. *Cancer* 2005;103:1330-1335.
435. Cobin RH, Gharib H, Bergman DA*, et al.* AACE/AAES medical/surgical guidelines for clinical practice: management of thyroid carcinoma. American Association of Clinical Endocrinologists. American College of Endocrinology. *Endocr Pract* 2001;7:202-220.
436. British Columbia Cancer Agency. Cancer Management Guidelines: Head and Neck Cancer (Thyroid Malignancies): www.bccancer.bc.ca; 2004. Accessed 12/10/2011.
437. Northern Cancer Network guidelines for management of thyroid cancer. *Clin Oncol (R Coll Radiol)* 2000;12:373-391.
438. Meadows KM, Amdur RJ, Morris CG*, et al.* External beam radiotherapy for differentiated thyroid cancer. *Am J Otolaryngol* 2006;27:24-28.
439. Tsang RW, Brierley JD, Simpson WJ*, et al.* The effects of surgery, radioiodine, and external radiation therapy on the clinical outcome of patients with differentiated thyroid carcinoma. *Cancer* 1998;82:375-388.
440. Tubiana M, Haddad E, Schlumberger M*, et al.* External radiotherapy in thyroid cancers. *Cancer* 1985;55:2062-2071.
441. Esik O, Nemeth G, Eller J. Prophylactic external irradiation in differentiated thyroid cancer: a retrospective study over a 30-year observation period. *Oncology* 1994;51:372-379.
442. Kagan AR, Nussbaum H, Chan P*, et al.* Thyroid carcinoma: is postoperative external irradiation indicated? *Oncology* 1974;29:40-45.
443. Terezakis SA, Lee KS, Ghossein RA*, et al.* Role of external beam radiotherapy in patients with advanced or recurrent nonanaplastic thyroid

cancer: Memorial Sloan-kettering Cancer Center experience. *Int J Radiat Oncol Biol Phys* 2009;73:795-801.

444. Australian Cancer Network Adult Brain Tumour Guidelines Working Party. Clinical practice guidelines for the management of adult gliomas: astrocytomas and oligodendrogliomas. Sydney: Cancer Council Australia, Australian Cancer Network and Clinical Oncological Society of Australia; 2009.
445. National Comprehensive Cancer Network. NCCN Clinical Practice Guidelines in Oncology: Central Nervous System Cancer Version 1.2011: www.nccn.org; 2010. Accessed 30/12/2010.
446. Laperriere N, Perry J, Zuraw L*, et al.* Radiotherapy for newly diagnosed malignant glioma in adults: A clinical practice guideline. A Quality Initiative of the Program in Evidence-based Care, Cancer Care Ontario. Evidence-based series #9-3: www.cancercare.on.ca; 2005. Accessed 5/10/2011.
447. Stupp R, Tonn JC, Brada M*, et al.* High-grade malignant glioma: ESMO Clinical Practice Guidelines for diagnosis, treatment and follow-up. *Ann Oncol* 2010;21 Suppl 5:v190-193.
448. Marcus KJ, Goumnerova L, Billett AL*, et al.* Stereotactic radiotherapy for localized low-grade gliomas in children: final results of a prospective trial. *Int J Radiat Oncol Biol Phys* 2005;61:374-379.
449. Combs SE, Schulz-Ertner D, Moschos D*, et al.* Fractionated stereotactic radiotherapy of optic pathway gliomas: tolerance and long-term outcome. *Int J Radiat Oncol Biol Phys* 2005;62:814-819.
450. Merchant TE, Conklin HM, Wu S*, et al.* Late effects of conformal radiation therapy for pediatric patients with low-grade glioma: prospective evaluation of cognitive, endocrine, and hearing deficits. *J Clin Oncol* 2009;27:3691-3697.
451. British Columbia Cancer Agency. Cancer Management Guidelines: Neuro-oncology: www.bccancer.bc.ca; 2009. Accessed 10/10/2011.
452. National Cancer Institute. PDQ Summary: Childhood Ependymoma: www.cancer.gov; 2010. Accessed 30/12/2010.

453. National Cancer Institute. PDQ Summary: Childhood Central Nervous System Embryonal Tumors: www.cancer.gov; 2010. Accessed 30/12/2010.
454. Central Brain Tumor Registry of the United States (CBTRUS). CBTRUS statistical report: Primary brain and central nervous system tumors diagnosed in the United States in 2004-2007: www.cbtrus.org; 2011. Accessed 10/10/2011.
455. van den Bent MJ, Afra D, de Witte O*, et al.* Long-term efficacy of early versus delayed radiotherapy for low-grade astrocytoma and oligodendroglioma in adults: the EORTC 22845 randomised trial. *Lancet* 2005;366:985-990.
456. Burkhard C, Di Patre PL, Schuler D*, et al.* A population-based study of the incidence and survival rates in patients with pilocytic astrocytoma. *J Neurosurg* 2003;98:1170-1174.
457. Metellus P, Barrie M, Figarella-Branger D*, et al.* Multicentric French study on adult intracranial ependymomas: prognostic factors analysis and therapeutic considerations from a cohort of 152 patients. *Brain* 2007;130:1338-1349.
458. National Cancer Institute. PDQ Summary: Adult Brain Tumours: www.cancer.gov; 2010. Accessed 10/10/2011.
459. National Cancer Institute. PDQ Summary: Childhood Astrocytomas: www.cancer.gov; 2010. Accessed 30/12/2010
460. Karim AB, Maat B, Hatlevoll R*, et al.* A randomized trial on dose-response in radiation therapy of low-grade cerebral glioma: European Organization for Research and Treatment of Cancer (EORTC) Study 22844. *Int J Radiat Oncol Biol Phys* 1996;36:549-556.
461. Shaw E, Arusell R, Scheithauer B*, et al.* Prospective randomized trial of low- versus high-dose radiation therapy in adults with supratentorial low-grade glioma: initial report of a North Central Cancer Treatment Group/Radiation Therapy Oncology Group/Eastern Cooperative Oncology Group study. *J Clin Oncol* 2002;20:2267-2276.
462. Bleehen NM, Stenning SP. A Medical Research Council trial of two radiotherapy doses in the treatment of grades 3 and 4 astrocytoma. The

Medical Research Council Brain Tumour Working Party. *Br J Cancer* 1991;64:769-774.

463. Stupp R, Mason WP, van den Bent MJ*, et al.* Radiotherapy plus concomitant and adjuvant temozolomide for glioblastoma. *N Engl J Med* 2005;352:987-996.

464. Due-Tonnessen BJ, Helseth E, Scheie D*, et al.* Long-term outcome after resection of benign cerebellar astrocytomas in children and young adults (0-19 years): report of 110 consecutive cases. *Pediatr Neurosurg* 2002;37:71-80.

465. Benesch M, Eder HG, Sovinz P*, et al.* Residual or recurrent cerebellar low-grade glioma in children after tumor resection: is re-treatment needed? A single center experience from 1983 to 2003. *Pediatr Neurosurg* 2006;42:159-164.

466. Kortmann RD, Kuhl J, Timmermann B*, et al.* Postoperative neoadjuvant chemotherapy before radiotherapy as compared to immediate radiotherapy followed by maintenance chemotherapy in the treatment of medulloblastoma in childhood: results of the German prospective randomized trial HIT '91. *Int J Radiat Oncol Biol Phys* 2000;46:269-279.

467. Thomas PR, Deutsch M, Kepner JL*, et al.* Low-stage medulloblastoma: final analysis of trial comparing standard-dose with reduced-dose neuraxis irradiation. *J Clin Oncol* 2000;18:3004-3011.

468. Hughes M, Soutar R, Lucraft H*, et al.* Guidelines on the Diagnosis and Management of Solitary Plasmacytoma of Bone, Extramedullary Plasmacytoma and Multiple Solitary Plasmacytomas: www.bschguidelines.com; 2009. Accessed 28/9/2012.

469. Soutar R, Lucraft H, Jackson G*, et al.* Guidelines on the diagnosis and management of solitary plasmacytoma of bone and solitary extramedullary plasmacytoma. *Br J Haematol* 2004;124:717-726.

470. National Comprehensive Cancer Network. NCCN Clinical Practice Guidelines in Oncology: Multiple Myeloma Version 1.2011: www.nccn.org; 2010. Accessed 30/12/2010.

471. Bird J, Owen R, d'Sa S*, et al.* Guidelines on the Diagnosis and Management of Multiple Myeloma: www.bschguidelines.com; 2010. Accessed 28/11/2011.

472. Talamo G, Farooq U, Zangari M*, et al.* Beyond the CRAB symptoms: a study of presenting clinical manifestations of multiple myeloma. *Clin Lymphoma Myeloma Leuk* 2010;10:464-468.
473. Camacho J, Arnalich F, Anciones B*, et al.* The spectrum of neurological manifestations in myeloma. *J Med* 1985;16:597-611.
474. Woo E, Yu YL, Ng M*, et al.* Spinal cord compression in multiple myeloma: who gets it? *Aust N Z J Med* 1986;16:671-675.
475. National Cancer Institute. PDQ Summary: Plasma Cell Neoplasms (Including Multiple Myeloma) Treatment: www.cancer.gov; 2010. Accessed 31/12/2010.
476. Knobel D, Zouhair A, Tsang RW*, et al.* Prognostic factors in solitary plasmacytoma of the bone: a multicenter Rare Cancer Network study. *BMC Cancer* 2006;6:118.
477. Tsang RW, Gospodarowicz MK, Pintilie M*, et al.* Solitary plasmacytoma treated with radiotherapy: impact of tumor size on outcome. *Int J Radiat Oncol Biol Phys* 2001;50:113-120.
478. Rades D, Hoskin PJ, Stalpers LJ*, et al.* Short-course radiotherapy is not optimal for spinal cord compression due to myeloma. *Int J Radiat Oncol Biol Phys* 2006;64:1452-1457.
479. Leigh BR, Kurtts TA, Mack CF*, et al.* Radiation therapy for the palliation of multiple myeloma. *Int J Radiat Oncol Biol Phys* 1993;25:801-804.
480. National Comprehensive Cancer Network. NCCN Clinical Practice Guidelines in Oncology: Soft Tissue Sarcoma Version 1.2011: www.nccn.org; 2010. Accessed 30/12/2010.
481. National Cancer Institute. PDQ Summary: Adult Soft Tissue Sarcoma: www.cancer.gov; 2010. Accessed 31/12/2010.
482. British Columbia Cancer Agency. Cancer Management Guidelines: Musculoskeletal and Sarcoma: www.bccancer.bc.ca; 2012. Accessed 2/4/2012.
483. O'Sullivan B, Davis AM, Turcotte R*, et al.* Preoperative versus postoperative radiotherapy in soft-tissue sarcoma of the limbs: a randomised trial. *Lancet* 2002;359:2235-2241.
484. Davis AM, O'Sullivan B, Bell RS*, et al.* Function and health status outcomes in a randomized trial comparing preoperative and

postoperative radiotherapy in extremity soft tissue sarcoma. *J Clin Oncol* 2002;20:4472-4477.

485. Davis AM, O'Sullivan B, Turcotte R*, et al.* Late radiation morbidity following randomization to preoperative versus postoperative radiotherapy in extremity soft tissue sarcoma. *Radiother Oncol* 2005;75:48-53.

486. Kepka L, DeLaney TF, Suit HD*, et al.* Results of radiation therapy for unresected soft-tissue sarcomas. *Int J Radiat Oncol Biol Phys* 2005;63:852-859.

487. National Comprehensive Cancer Network. NCCN Clinical Practice Guidelines in Oncology: Bone Cancer Version 1.2011: www.nccn.org; 2010. Accessed 30/12/2010.

488. National Cancer Institute. PDQ Summary: Osteosarcoma and Malignant Fibrous Histiocytoma www.cancer.gov; 2010. Accessed 31/12/2010.

489. National Cancer Institute. PDQ Summary: Ewing Sarcoma Family of Tumours: www.cancer.gov; 2010. Accessed 31/12/2010.

490. Chatani M, Matayoshi Y, Masaki N*, et al.* Radiation therapy for brain metastases from lung carcinoma. Prospective randomized trial according to the level of lactate dehydrogenase. *Strahlenther Onkol* 1994;170:155-161.

491. Chatani M, Teshima T, Hata K*, et al.* Whole brain irradiation for metastases from lung carcinoma. A clinical investigation. *Acta Radiol Oncol* 1985;24:311-314.

492. Harwood AR, Simson WJ. Radiation therapy of cerebral metastases: a randomized prospective clinical trial. *Int J Radiat Oncol Biol Phys* 1977;2:1091-1094.

493. Kurtz JM, Gelber R, Brady LW*, et al.* The palliation of brain metastases in a favorable patient population: a randomized clinical trial by the Radiation Therapy Oncology Group. *Int J Radiat Oncol Biol Phys* 1981;7:891-895.

494. Murray KJ, Scott C, Greenberg HM*, et al.* A randomized phase III study of accelerated hyperfractionation versus standard in patients with unresected brain metastases: a report of the Radiation Therapy

Oncology Group (RTOG) 9104. *Int J Radiat Oncol Biol Phys* 1997;39:571-574.

495. Priestman TJ, Dunn J, Brada M*, et al.* Final results of the Royal College of Radiologists' trial comparing two different radiotherapy schedules in the treatment of cerebral metastases. *Clin Oncol (R Coll Radiol)* 1996;8:308-315.
496. Borgelt B, Gelber R, Kramer S*, et al.* The palliation of brain metastases: final results of the first two studies by the Radiation Therapy Oncology Group. *Int J Radiat Oncol Biol Phys* 1980;6:1-9.
497. Borgelt B, Gelber R, Larson M*, et al.* Ultra-rapid high dose irradiation schedules for the palliation of brain metastases: final results of the first two studies by the Radiation Therapy Oncology Group. *Int J Radiat Oncol Biol Phys* 1981;7:1633-1638.
498. McQuay HJ, Carroll D, Moore RA. Radiotherapy for painful bone metastases: a systematic review. *Clin Oncol (R Coll Radiol)* 1997;9:150-154.
499. Wu JS, Wong R, Johnston M*, et al.* Meta-analysis of dose-fractionation radiotherapy trials for the palliation of painful bone metastases. *Int J Radiat Oncol Biol Phys* 2003;55:594-605.
500. Sze WM, Shelley MD, Held I*, et al.* Palliation of metastatic bone pain: single fraction versus multifraction radiotherapy--a systematic review of randomised trials. *Clin Oncol (R Coll Radiol)* 2003;15:345-352.
501. Roos DE, Turner SL, O'Brien PC*, et al.* Randomized trial of 8 Gy in 1 versus 20 Gy in 5 fractions of radiotherapy for neuropathic pain due to bone metastases (Trans-Tasman Radiation Oncology Group, TROG 96.05). *Radiother Oncol* 2005;75:54-63.
502. Rades D, Stalpers LJ, Veninga T*, et al.* Evaluation of five radiation schedules and prognostic factors for metastatic spinal cord compression. *J Clin Oncol* 2005;23:3366-3375.
503. Jacob S, Wong K, Delaney GP*, et al.* Estimation of an optimal utilisation rate for palliative radiotherapy in newly diagnosed cancer patients. *Clin Oncol (R Coll Radiol)* 2010;22:56-64.

504. Mou B, Cooke AL, Suderman K. Radiation oncology in a Canadian province: measures of workload and treatment complexity. *Clin Oncol (R Coll Radiol)* 2011;23:4-9.
505. Department of Radiation Oncology, The Alfred Hospital. A 10 year statistical review of the William Buckland Radiotherapy Centre. Melbourne; 2002.
506. Queensland Radium Institute. Queensland Radium Institute Outcome Data Statistics 1993-1997. Brisbane; 1997.
507. Cancer Council Australia and Australian Cancer Network, Sydney. Basal cell carcinoma, squamous cell carcinoma (and related lesions)-a guide to clinical management in Australia. Sydney; 2008.
508. National Comprehensive Cancer Network. NCCN Clinical Practice Guidelines in Oncology: Basal Cell and Squamous Cell Skin Cancers Version 2.2012: www.nccn.org; 2012. Accessed 25/9/2012.
509. Thom GA, Heywood JM, Cassidy B*, et al.* Three-year retrospective review of superficial radiotherapy for skin conditions in a Perth radiotherapy unit. *Australas J Dermatol* 2003;44:174-179.
510. Silva JJ, Tsang RW, Panzarella T*, et al.* Results of radiotherapy for epithelial skin cancer of the pinna: the Princess Margaret Hospital experience, 1982-1993. *Int J Radiat Oncol Biol Phys* 2000;47:451-459.
511. Moller TR, Brorsson B, Ceberg J*, et al.* A prospective survey of radiotherapy practice 2001 in Sweden. *Acta Oncol* 2003;42:387-410.
512. Cancer Institute NSW. Cancer incidence and mortality: projections 2011 to 2021. Sydney: Cancer Institute NSW; 2011.
513. Dixon P, Mackillop W. Could changes in clinical practice reduce waiting lists for radiotherapy? *J Health Serv Res Policy* 2001;6:70-77.
514. Ruggieri-Pignon S, Pignon T, Marty M*, et al.* Infrastructure of radiation oncology in France: a large survey of evolution of external beam radiotherapy practice. *Int J Radiat Oncol Biol Phys* 2005;61:507-516.
515. Timmerman R, Paulus R, Galvin J*, et al.* Stereotactic body radiation therapy for inoperable early stage lung cancer. *JAMA* 2010;303:1070-1076.
516. Baumann P, Nyman J, Hoyer M*, et al.* Outcome in a prospective phase II trial of medically inoperable stage I non-small-cell lung cancer patients

treated with stereotactic body radiotherapy. *J Clin Oncol* 2009;27:3290-3296.

517. Grutters JP, Kessels AG, Pijls-Johannesma M*, et al.* Comparison of the effectiveness of radiotherapy with photons, protons and carbon-ions for non-small cell lung cancer: a meta-analysis. *Radiother Oncol* 2010;95:32-40.

518. Palma D, Visser O, Lagerwaard FJ*, et al.* Impact of introducing stereotactic lung radiotherapy for elderly patients with stage I non-small-cell lung cancer: a population-based time-trend analysis. *J Clin Oncol* 2010;28:5153-5159.